htc

VIVE

VIVE Pro HMD User guide

Contents

System requirements

What are the system requirements? 5
How can I check if my PC meets the minimum system requirements for VIVE? 6
Can I still use VIVE if my PC doesn't meet the system requirements? 6
What's inside the box? 6

Headset and link box

Headset 7
Link box 24
Product care and repair 27
Common solutions 33

Base stations

About the VIVE base stations 38
Installing the base stations 39
Tips for setting up the base stations 41
Using the mounting kit 42
Updating base station firmware via cable connection 43
Updating base station firmware via Bluetooth 43
What does the status light on the base stations mean? 44
What should I do if any of the base stations is not detected? 44
Can I use the older version of the base stations together with SteamVR Base Station 2.0? 44
Which VIVE hardware is compatible with my base stations? 45
Do I need to use the sync cable? 45
Are the base stations covered by warranty if accidentally damaged? 46
When VIVE Pro is in use, my TV remote isn't working. What can I do? 46

Controllers

About the VIVE controllers 47
Charging the controllers 48
Turning the controllers on or off 48
Pairing the controllers with the headset 48
Attaching the lanyards to the controllers 49
Updating controller firmware 49
What does the status light on the controllers mean? 50
What should I do if any of the controllers is not tracked? 50
How do I know which of the controllers is not being tracked? 50
What can I do if the controller's trackpad is oversensitive? 51
What should I do if my controller won't turn on? 51
The controller automatically turns off. What should I do? 51
My controller won't turn on after I accidentally unplugged it during firmware update. What should I do? 52

Play area

What is the play area? 53
Planning your play area 53
Choosing the play area 54

Setting up VIVE Pro HMD for the first time 55
Setting up a standing-only play area 55
Setting up a room-scale play area 56
Resetting the play area 56
Verifying your setup 57
After setting up, how do I turn the VIVE system on? 57
What is the recommended space for the play area? 58
Can I include space occupied by furniture for the play area? 58
Will VR apps that are for limited spaces or stationary experiences only work with a room-scale setup? 58
How do I resolve download errors during VIVE Setup installation? 58
I can't complete the room setup. What should I do? 58

Settings

Audio settings 59
System Dashboard settings 60
Phone notifications 63
SteamVR 65

Trademarks and copyrights

Index

About this guide

We use the following symbols to indicate useful and important information:

This is a note. It provides detailed information for setup, common questions, and what to do in specific situations.

This is a tip. It will give you an alternative way to do a particular step or procedure that you may find helpful.

This indicates important information that you need in order to accomplish a certain task or to get a feature to work properly.

This is a warning. Take note to avoid potential problems or prevent damage to your hardware.

Information contained in this guide may have changed. For the most up-to-date information, including the latest version of this guide, go to VIVE Support.

Before using the product, carefully review VIVE safety information and follow all product safety and operating instructions on https://www.vive.com/legal/.

System requirements

What are the system requirements?

To use VIVE Pro, your computer must meet the following system requirements.

To find out if your computer is ready for VR, download and run the Vive Quick Compatibility Check.

Component	Recommended system requirements	Minimum system requirements
Processor	Intel® Core™ i5-4590/AMD FX™ 8350 equivalent or better	Intel Core i5-4590/AMD FX 8350 equivalent or better
GPU	NVIDIA® GeForce® GTX 1070/ Quadro P5000 equivalent or better, AMD Radeon™ Vega 56 equivalent or better	NVIDIA GeForce GTX 970, AMD Radeon R9 290 equivalent or better
Memory	4 GB RAM or more	4 GB RAM or more
Video output	DisplayPort 1.2 or newer	DisplayPort 1.2 or newer
USB port	1x USB 3.0 or newer	1x USB 3.0 or newer
Operating system	Windows® 10	Windows 7 SP1, Windows 8.1 or later, Windows 10

- Before using VIVE Pro with Windows 7 SP1, you're required to download and install the latest driver updates.
- For the best experience with the dual camera's see-through feature, it is highly recommended that you upgrade your OS to Windows 10.

How can I check if my PC meets the minimum system requirements for VIVE?

To find out if your computer is ready for VR, download and run the Vive Quick Compatibility Check.

Can I still use VIVE if my PC doesn't meet the system requirements?

In order for you to enjoy the VIVE™ experience, it is recommended that you at least have a PC that meets the minimum system requirements. For details, see What are the system requirements? on page 5.

What's inside the box?

Your VIVE Pro HMD comes with the following items, which you'll use to experience immersive VR environments:

Main component	Accessories
Headset	▪ Headset cable (attached) ▪ Face cushion (attached) ▪ Cleaning cloth ▪ Earphone hole cap (2)
Link box	▪ Power adapter ▪ DisplayPort™ cable ▪ USB 3.0 cable ▪ Mounting pad

You can also find documentation in the box, such as the Safety and regulatory guide and warranty card.

Headset and link box

Headset

About the VIVE Pro HMD

The headset is your window to the VR environment.

The headset has sensors that are tracked by the base stations.

The sensors on the headset are sensitive. Do not cover or scratch the sensor lenses, including the proximity sensor.

Front and side

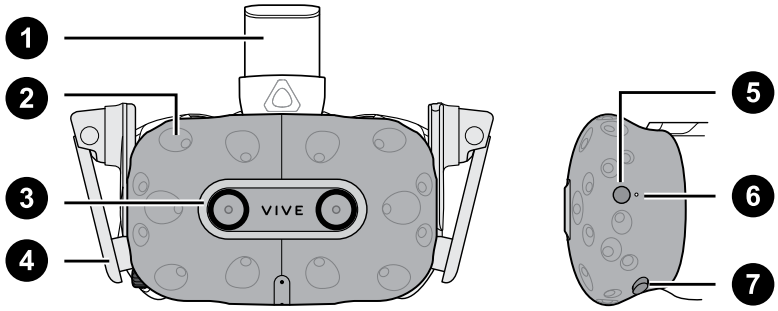

1	Headset strap
2	Tracking sensor
3	Camera lens
4	Earphone
5	Headset button
6	Status light
7	Lens distance button

Back

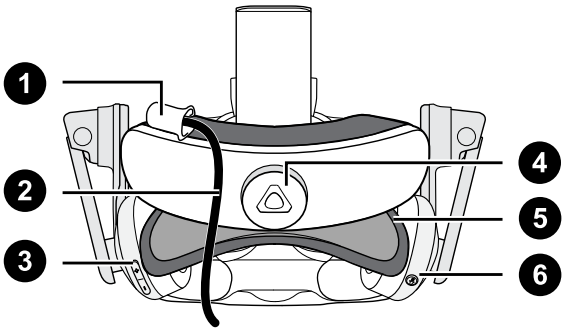

1	Headset cable clip
2	Headset cable
3	Volume button
4	Adjustment dial
5	Head pad
6	Mic mute button

Bottom and inner

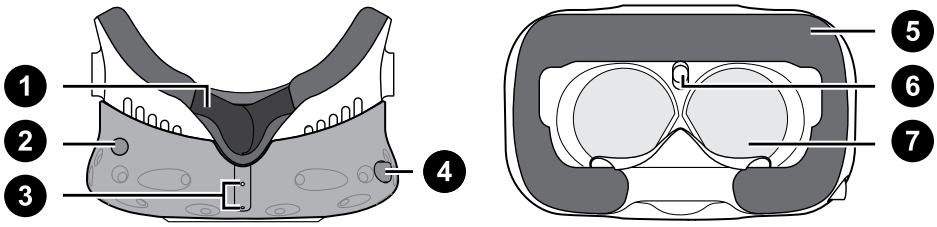

1	Nose rest
2	Lens distance button
3	Mic
4	Interpupillary distance (IPD) knob
5	Face cushion
6	Proximity sensor
7	Lenses

Putting on the VIVE Pro HMD

Before putting on the headset, make sure to remove the protective film or paper cover from the lenses. Keep it in a safe place so you can protect your headset during storage or shipping.

1. Loosen the strap by rotating the adjustment dial counter-clockwise, and then detach the velcro fastener on the top band.

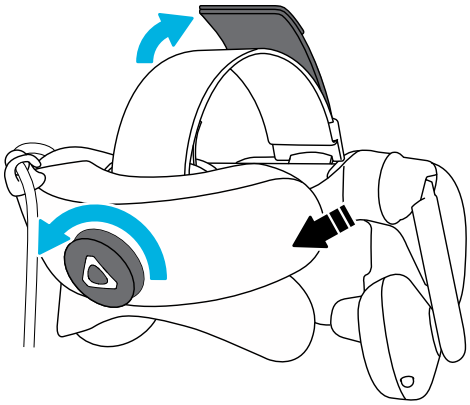

2. Press the headset towards your eyes, and then slide the strap around the back of your head.

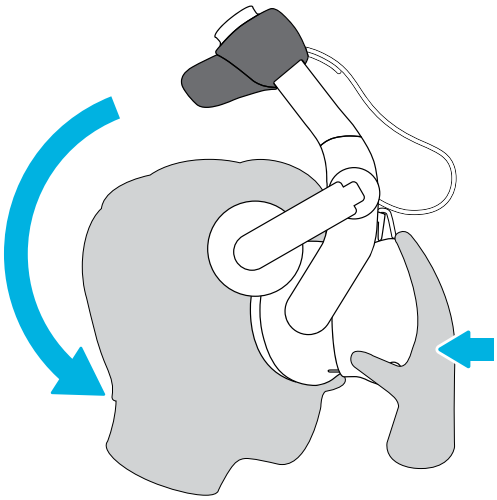

3. Rotate the adjustment dial clockwise until the headset fits snugly, and then reattach the velcro fastener on the top band.

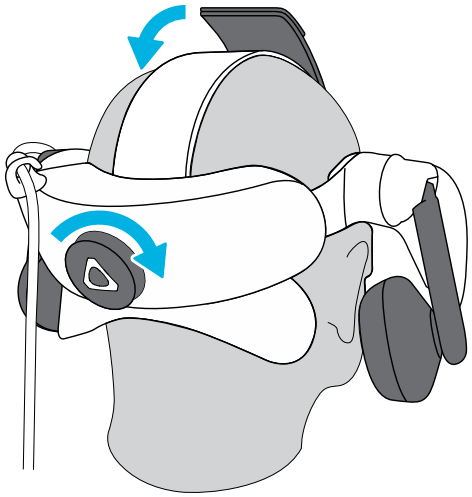

4. Adjust the earphones to a comfortable position over your ear, and then press the earphones towards your ears until they're properly in place.

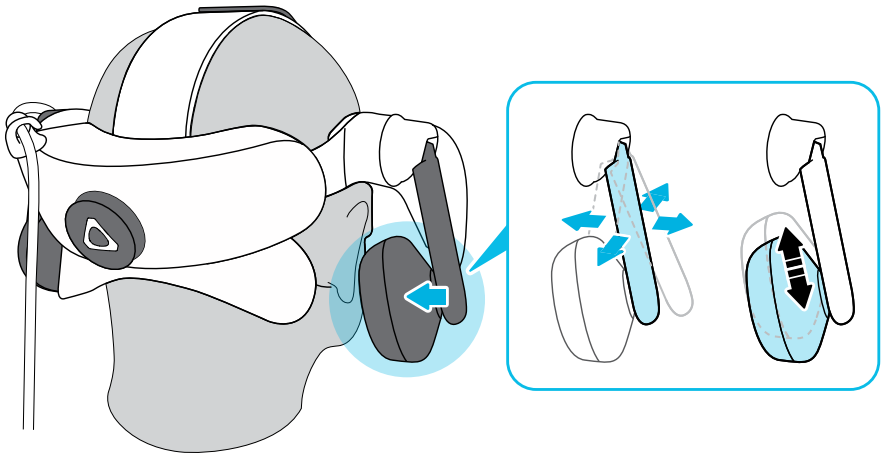

5. Make sure that the headset cable passes through the cable clip at the back of the headset, and is positioned straight down your back.

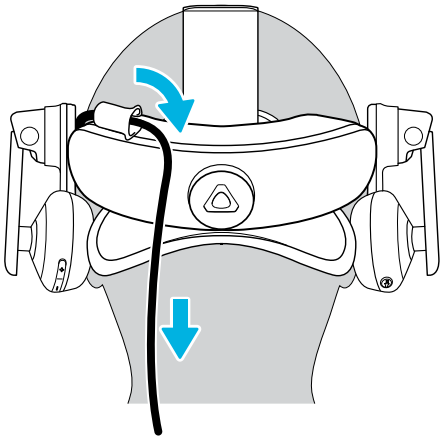

When taking the headset off, remember to loosen the strap first by rotating the adjustment dial counter-clockwise.

Adjusting the IPD on the headset

Interpupillary distance (IPD) is the distance between the centers of your eyes.

If you don't know your IPD, see How can I find my IPD? on page 12. Use this measurement as a guide to adjust the distance between the lenses of the headset so that you'll have a better viewing experience.

To increase the distance between the lenses, rotate the IPD knob clockwise. To decrease, rotate the IPD knob counterclockwise.

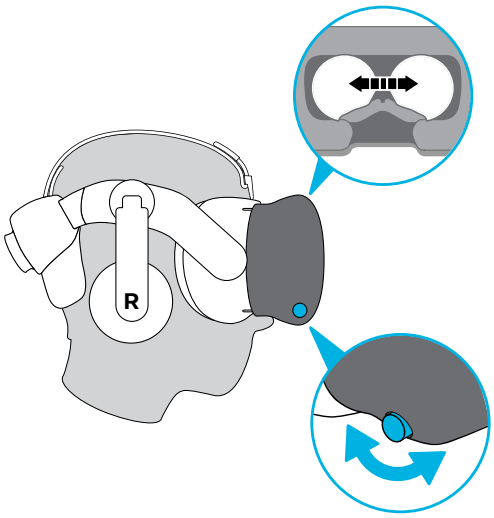

As you adjust the IPD, you'll see a prompt indicating the current distance between the centers of the lenses.

Why is accurate IPD important?

Accurate IPD settings help get a clear image and reduce eye strain.

The headset lenses focus images toward their optical center. This is sometimes called the "sweet spot" in the VR industry. By adjusting the IPD knob, you can tune the sweet spot for the most comfortable view. Misaligned IPD and improperly adjusted headsets are common causes of blurry images, dizziness, and eye strain.

How can I find my IPD?

There are several ways to estimate your IPD.

The most accurate way to determine your IPD is to consult a professional optometrist or eye doctor. You can also estimate your IPD by doing any of the following:

- Use a ruler and a mirror. See below for detailed instructions.
- Through experimentation. See below for detailed instructions.
- Using third-party apps or websites.

Third-party apps or websites may collect personal data. HTC cannot guarantee accuracy of third-party apps or websites in measuring IPD.

Estimating your IPD in a mirror

You can estimate your IPD with a ruler and mirror.

This method requires a millimeter ruler.

1. Stand directly in front of a mirror, and then hold the ruler up to your eyes. Make sure that the ruler is level. If you're using a flexible ruler, make sure not to bend it.

2. Align the zero mark with the center of your pupil. You may need to close your other eye to get a clear measure.

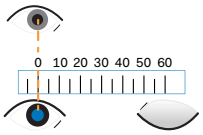

3. Check the millimeter mark on the other eye. You may need to close the first eye to get a clear measure.

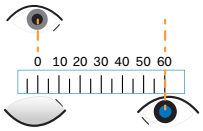

4. Make a note of your IPD measurement. You may want to recheck several times to make sure your reading is accurate.

You can also ask a friend to help you measure instead of using a mirror. Make sure you're looking straight ahead while they measure.

Estimating your IPD through experimentation

You can estimate IPD by trying different settings. This method is very convenient, but might be less accurate.

1. While wearing the VR headset, focus on text or lines at the center of view. If no text is present, open a screen in VR with text.
2. Adjust the IPD knob until the text is clear. Note the number for future use.
3. If the image in one eye is clearer than the other, adjust the headset position. Repeat until images are clear for both eyes.

Can I wear my prescription glasses while using VIVE Pro?

Most glasses fit inside the headset. If you wear large prescription glasses, adjust the lens distance to increase the space in the headset.

Make sure that no part of your glasses scratch the headset lenses.

Adjusting the lens distance on the headset

If you wear large prescription glasses or have long eyelashes, you may need to increase the lens distance further from your face. Only increase this distance as necessary, as the closer the lenses are to your eyes, the better your field of view will be while wearing the headset.

- Make sure that no part of your glasses scratch the headset lenses.
- Do not attempt to adjust the visor without pressing the lens distance button.

Press and hold the lens distance button on the headset, and then pull or push the visor to adjust the lens farther or closer to your face.

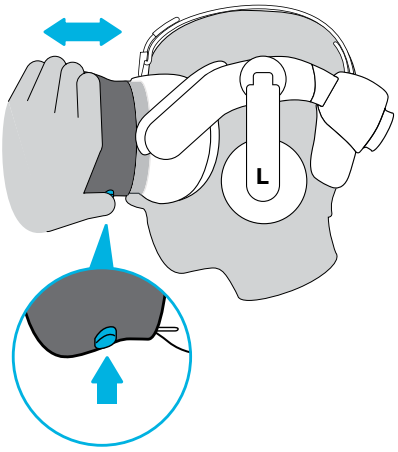

Replacing the face cushion

You can remove the face cushion to clean it. For more information, see Cleaning the face cushion on page 28.

1. To remove the face cushion, peel off starting from both ends of the face cushion until it detaches from the headset.

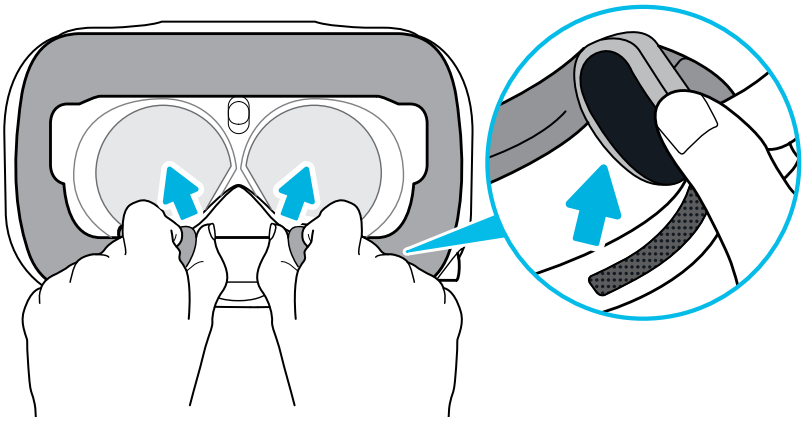

2. To replace the face cushion, insert the tab on the face cushion into the slot on the headset, and then align the hook and loop strips.

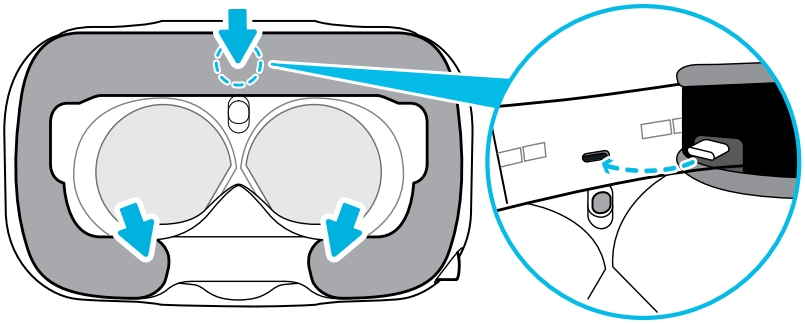

Connecting a USB device to the VIVE Pro HMD

You can connect a USB Type-C compatible third-party device to VIVE Pro HMD using a USB cable.

1. Peel off the face cushion starting from both ends until it detaches from the headset.

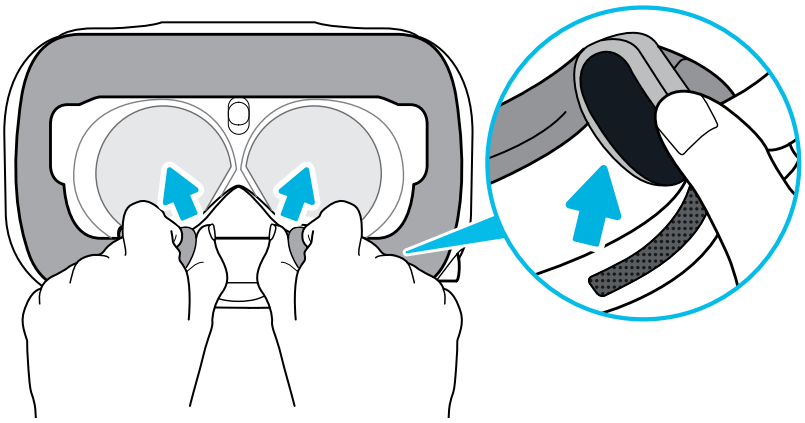

2. Carefully pry open the compartment cover from its flap. Pull the cover out to access the ports on the headset.

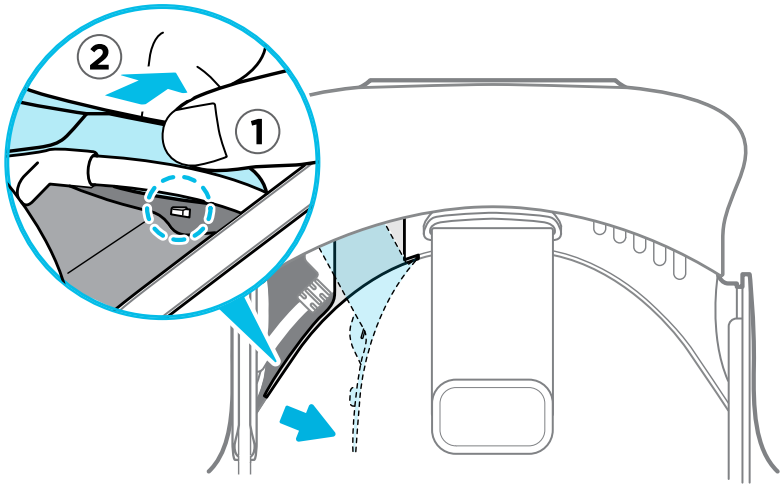

3. Insert the cable connector of the device to the USB Type-C port on the headset.

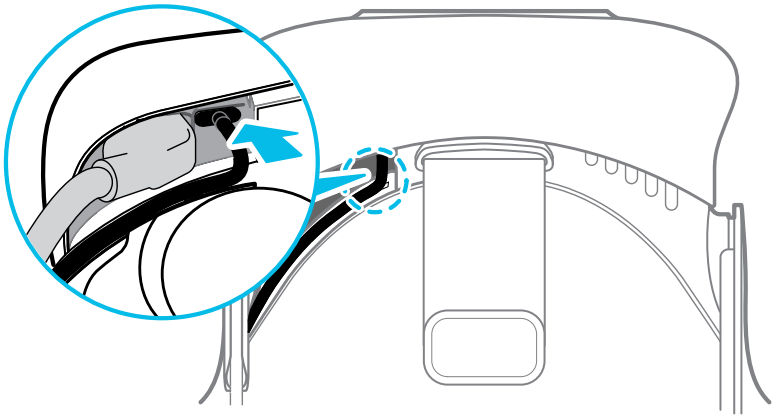

4. Align and push the tabs of the compartment cover onto their corresponding holes.

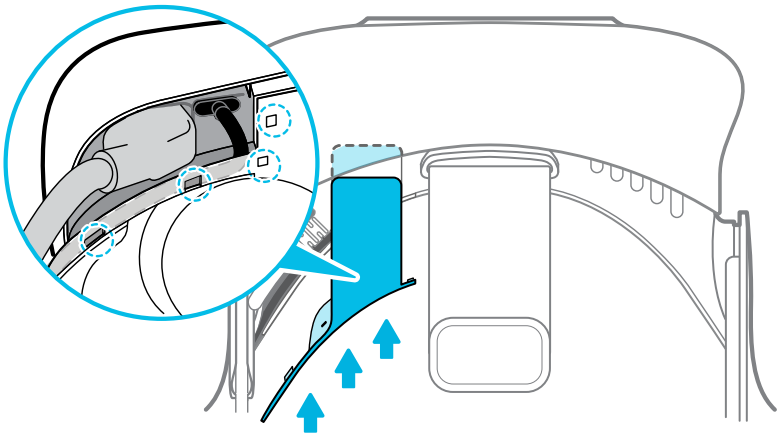

5. Replace the face cushion by inserting its tab into the slot on the headset, and then aligning the hook and loop strips.

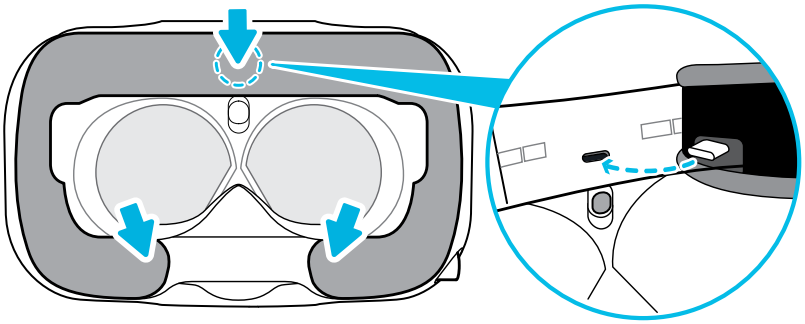

6. Connect the other end of the USB cable to the third-party device.

Removing the headset earphones

If you need to, you can remove the headset earphones.

1. Peel off the side cushions on the strap near the earphones.

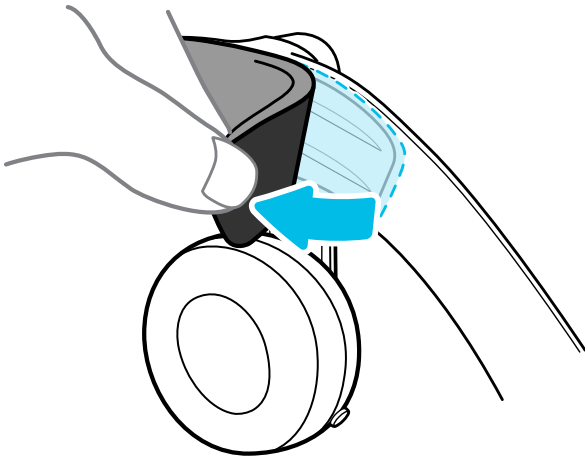

2. Use a cross-shaped screwdriver (`PH00`) to detach the earphone from the strap.

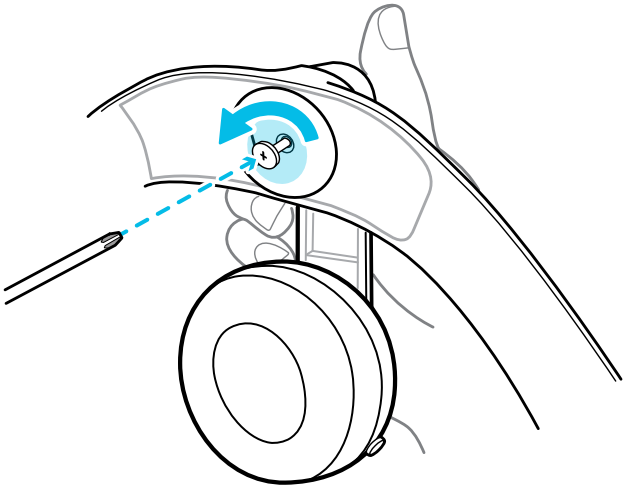

3. Gently pull each earphone until it detaches from the strap and then set it aside.

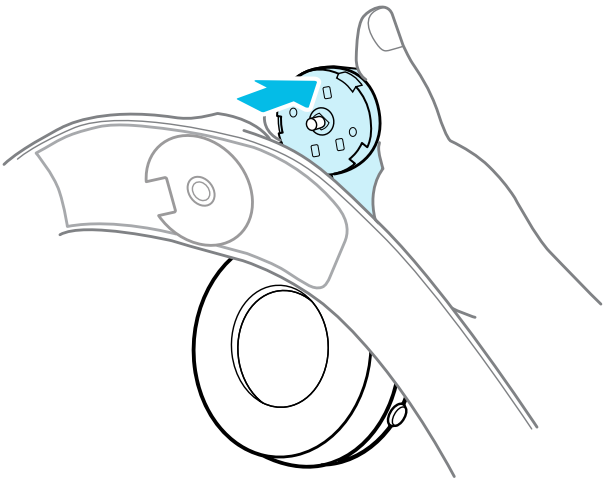

4. Replace the cap with the screw you removed earlier.

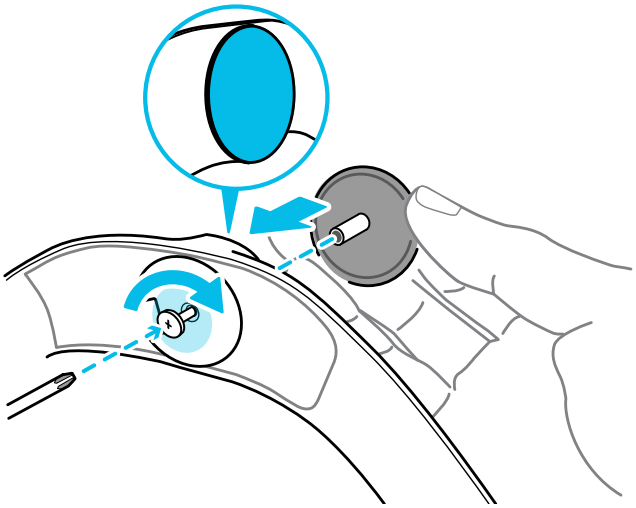

After detaching the earphones, make sure to put it in a safe place. Do not squeeze or press down the earphones. When storing, do not put the earphones under a heavy object that could press or squeeze them down.

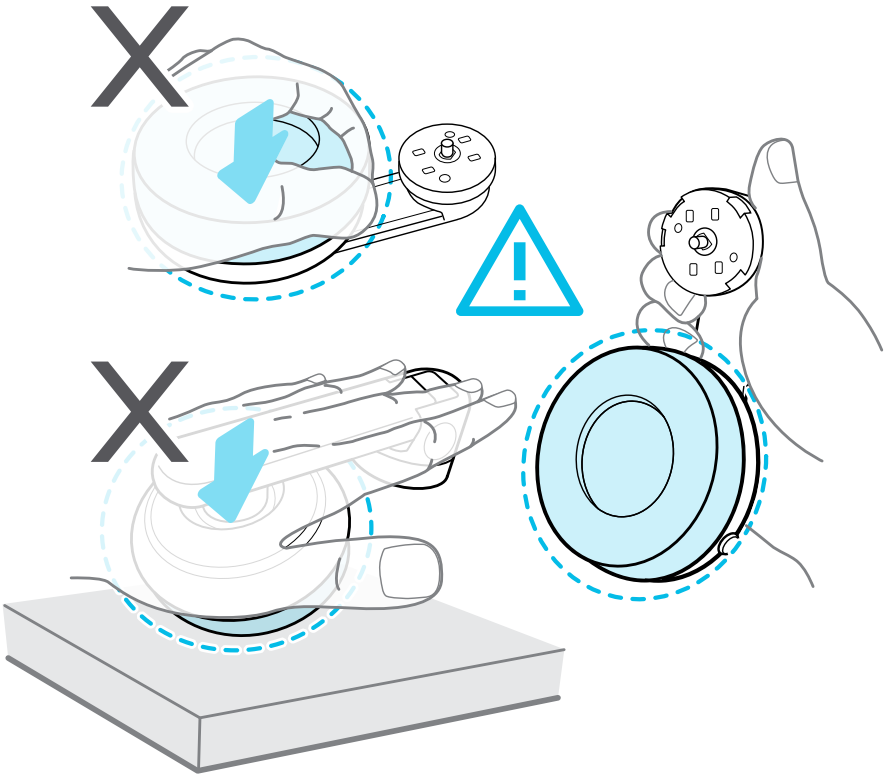

Replacing the headset earphones

You can use your own USB Type-C™ compatible earphones with the VIVE Pro HMD. If you want to use compatible 3.5mm earphones, you'll need a USB Type-C to 3.5mm audio adapter.

1. Remove the headset earphones first, otherwise audio will still come out from it. For details, see Removing the headset earphones on page 18.
2. Peel off the face cushion starting from both ends until it detaches from the headset.

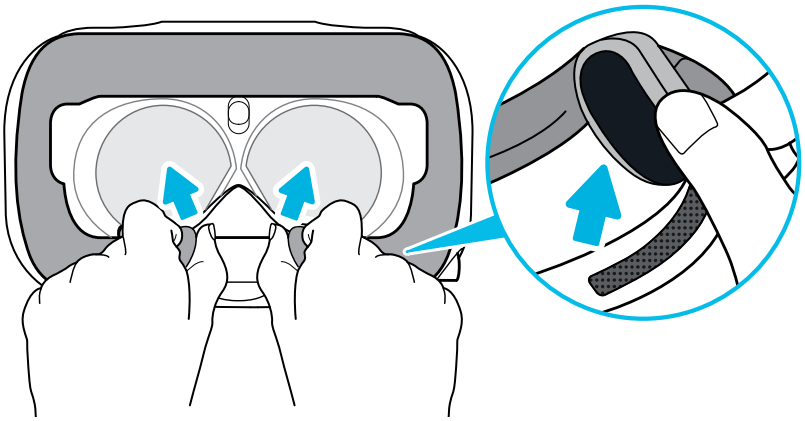

3. Carefully pry open the compartment cover from its flap. Pull the cover out to access the ports on the headset.

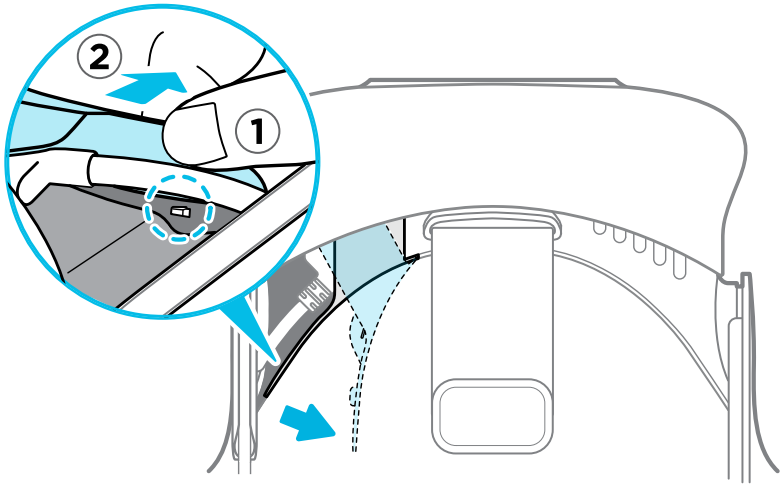

4. Insert the cable connector of your earphones on the USB Type-C port.

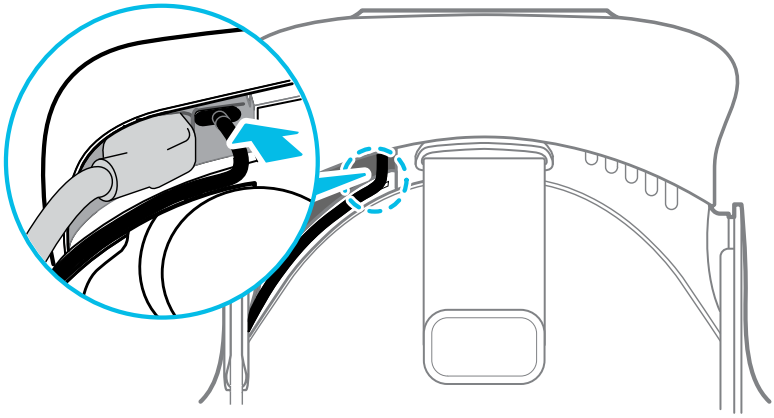

5. Align and push the tabs of the compartment cover onto their corresponding holes.

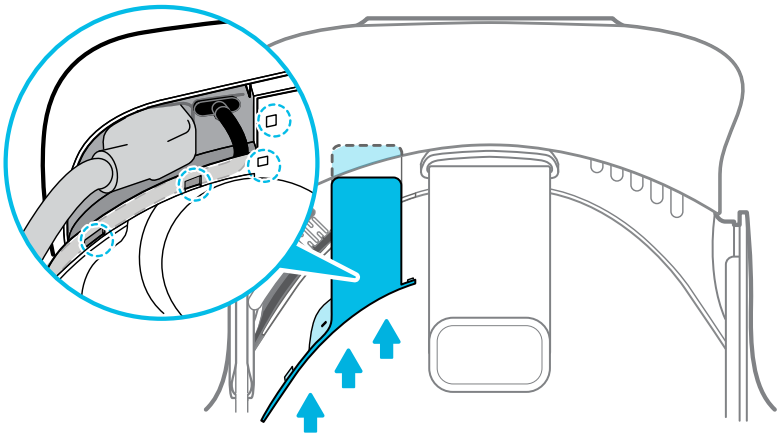

6. Replace the face cushion by inserting its tab into the slot on the headset, and then aligning the hook and loop strips.

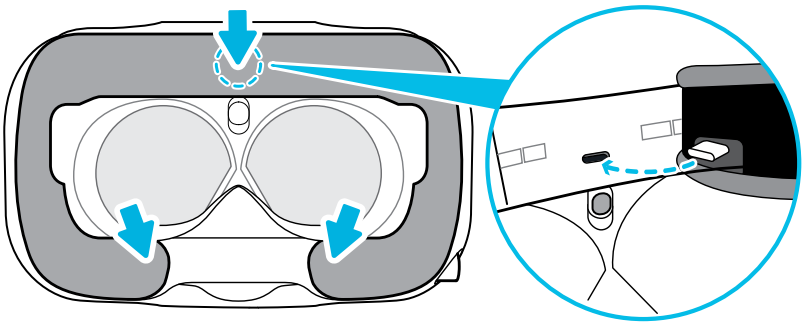

Reattaching the head pad on the headset strap

Always make sure that the head pad is attached to the headset.

1. Hold the headset upside down.
2. Pin the head pad's right-most tab with its corresponding slot on the headset strap.

3. Press the tabs on the head pad's right side into the slots on the headset strap to lock the tabs in place.

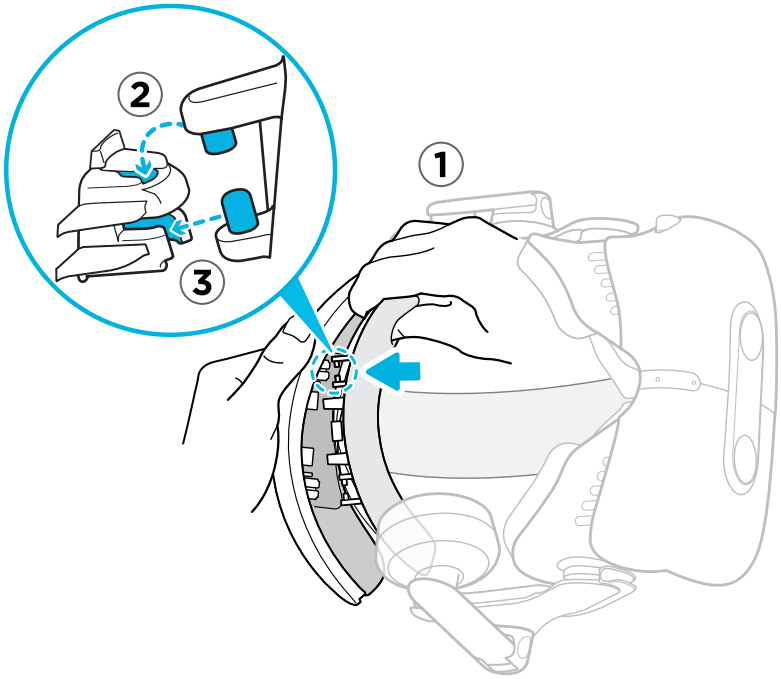

4. Gently bend the base of the head pad's left side to align its tabs with the slots on the headset strap.
5. Press the tabs on the head pad's left side into the slots on the headset strap to fully attach the head pad.

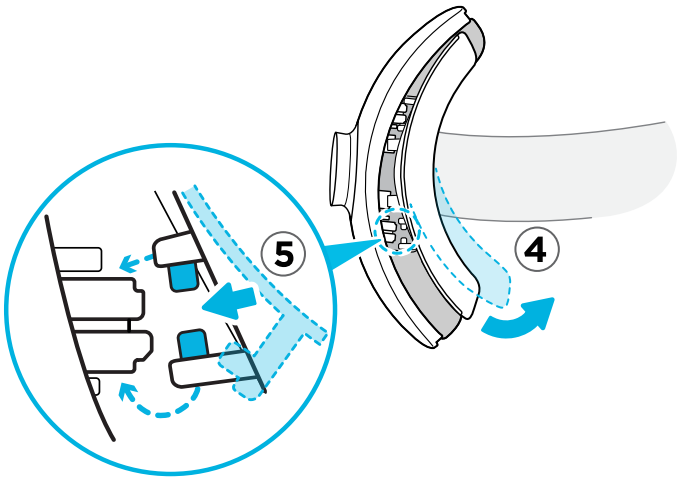

Updating the headset firmware

1. From your computer, open the SteamVR app.
2. If you see the icon, mouse over it to check if the firmware is out of date.

3. Click **Update Device**. The firmware update will start automatically.

> **!** Do not unplug any cables from the headset, link box, or your computer any time before the firmware update is complete. Doing so could result in a firmware error.

4. When the update is complete, click **Done**.

What does the status light on the headset mean?

The status light shows:

- Green when the headset is in normal mode
- Dim green when the headset is on standby
- Red when an error is encountered (with cables, display, or the like)

What is the dual camera used for?

The dual camera brings real world into VR. Some VR content use the dual camera to scan your room and integrate it with the VR experience.

Whenever you're in the System Dashboard, you'll also see a window showing your actual room.

To activate the dual camera, see Activating the dual camera on page 65.

Link box

About the link box

Use the link box to connect the headset to your computer.

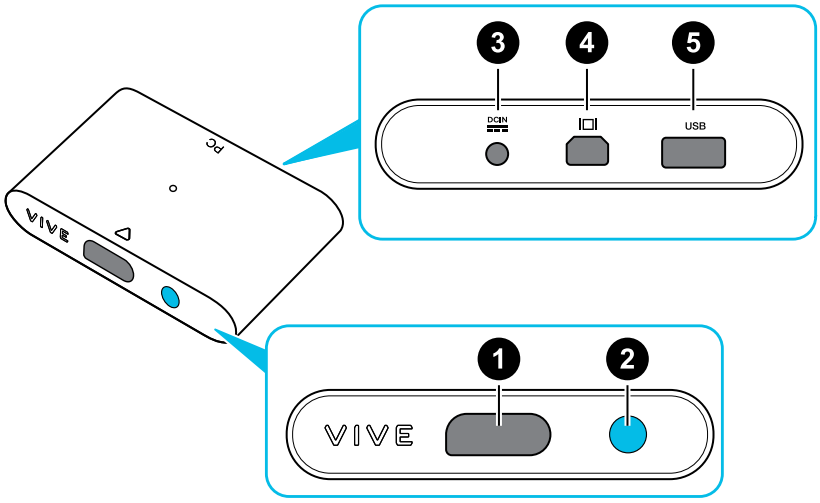

1	Headset cable port
2	Power button
3	Power port

4	DisplayPort port
5	USB 3.0 port

Connecting the headset to your computer

1. Connect the USB 3.0 cable, DisplayPort cable, and power adapter cable on their corresponding slots on the link box.
2. Plug the power adapter into an electrical outlet.
3. Insert the opposite end of the USB 3.0 cable on your computer's USB port.
4. Insert the DisplayPort cable end to the DisplayPort port on your computer's graphics card where the monitor is also connected. Do not connect the DisplayPort cable to ports on the motherboard.
5. Insert the headset cable connector (side with triangle mark up) to the port on the link box with the corresponding triangle mark.

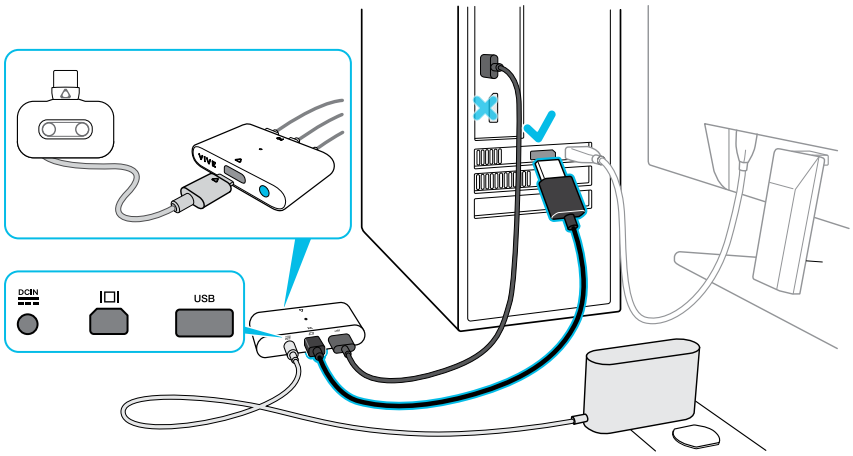

6. Press the Power button to turn the link box on.
7. To secure the link box in a permanent position, peel the covers from the mounting pad and firmly press one side of the adhesive surface on the bottom part of the link box, and then attach the link box on the area where you want it installed.

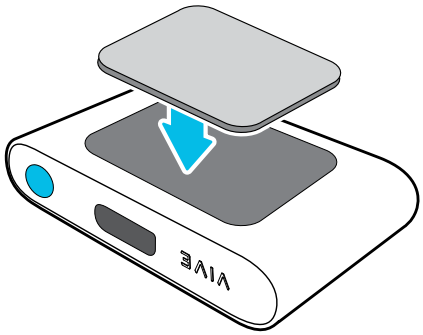

Can I use a laptop with VIVE Pro?

As long as your laptop meets the system requirements, you can use it with VIVE Pro.

If your laptop does not have a DisplayPort port but has a Mini DisplayPort port instead, you can purchase a Mini DisplayPort-to-Mini DisplayPort 1.2 or newer cable, and then connect it to the link box and to your laptop. Make sure that the cable you purchase supports Ultra High Definition (UHD) 4K @ 60Hz or higher.

This workaround does not guarantee compatibility. Contact your computer or accessory manufacturer if you have questions.

Restarting the link box

If you need to restart the link box, follow these steps.

1. Close all Steam apps on your computer, including the SteamVR app.
2. Press the Power button to turn the link box off, and then press the Power button again to turn it back on. On your computer, you might see a notification that drivers are being installed. Wait for the installation to finish.
3. To verify that VIVE hardware is detected, restart SteamVR on your computer.

Product care and repair

Caring for your VIVE Pro

Follow these tips to properly care for your VIVE Pro.

- Keep the headset lenses away from sharp objects, including cable tips. This will prevent the headset lenses from being scratched.

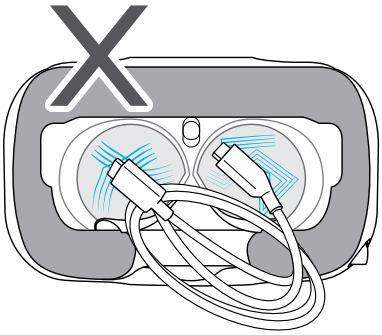

- When not in use, store the headset with the lenses pointed away from direct sunlight. Failure to do so may damage the headset display.
- When storing the headset, it is recommended to cover the lenses with the protective film or paper cover to help prevent accidental scratches.

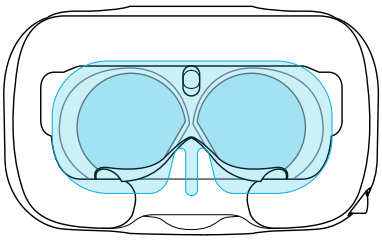

Cleaning the face cushion

1. Before cleaning the face cushion, remove it first from the VIVE Pro headset. For details, see Replacing the face cushion on page 15.
2. When cleaning the face cushion, remember to:
   - Dampen a clean smooth cloth with cold water and gently wipe the area you want to clean.
   - Air dry at room temperature. Don't tumble dry, iron, or expose it to direct sunlight.
   - Don't scrub, wring, or bleach.
   - Don’t dip or soak in water.

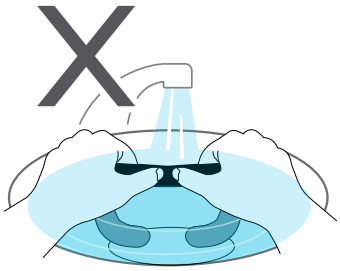

Cleaning the headset lenses

1. Use the cleaning cloth provided in the box to wipe the lenses.
2. Wipe in a circular motion from the center to the outer edges of the lenses.

   While cleaning the lenses, do not scratch the lenses nor disassemble other parts of the headset.

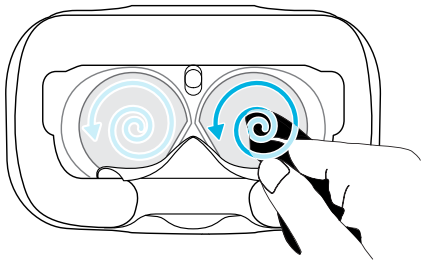

How do I prepare the headset if I'm returning it for repair?

Before sending in the headset for repair, remove the following accessories and store them for safekeeping:

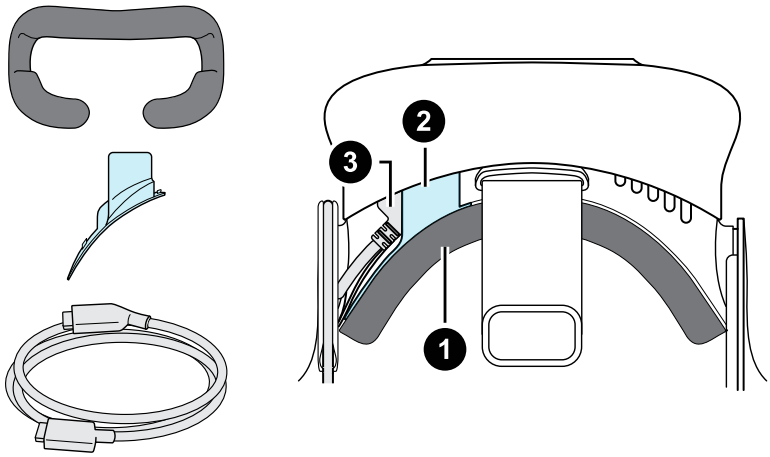

1	Face cushion
2	Compartment cover
3	Headset cable

Follow these steps to properly detach the accessories from the headset:

- Peel off the face cushion starting from both ends until it detaches from the headset.

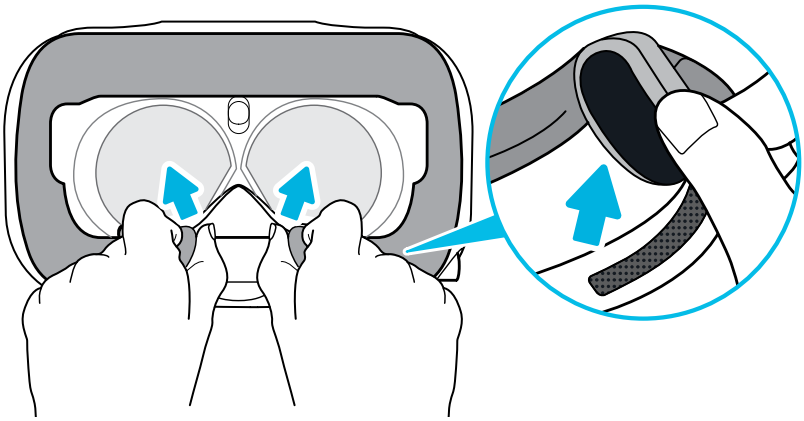

- Carefully pry open the compartment cover from its flap. Pull the cover out to access the ports on the headset.

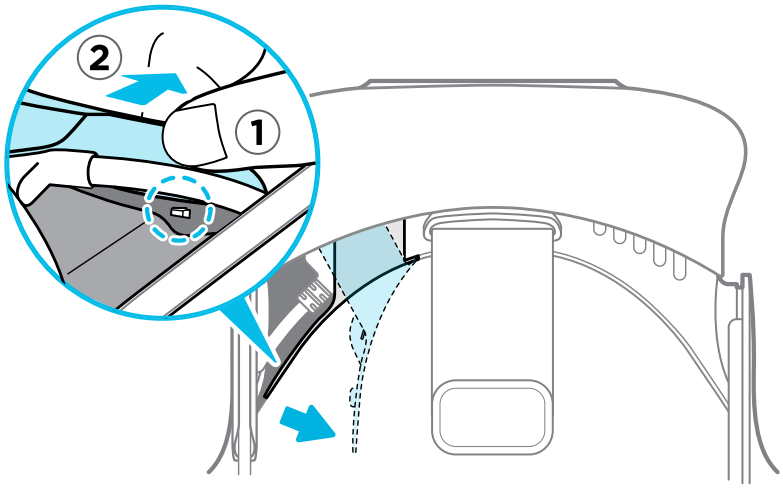

- Unplug the headset cable.

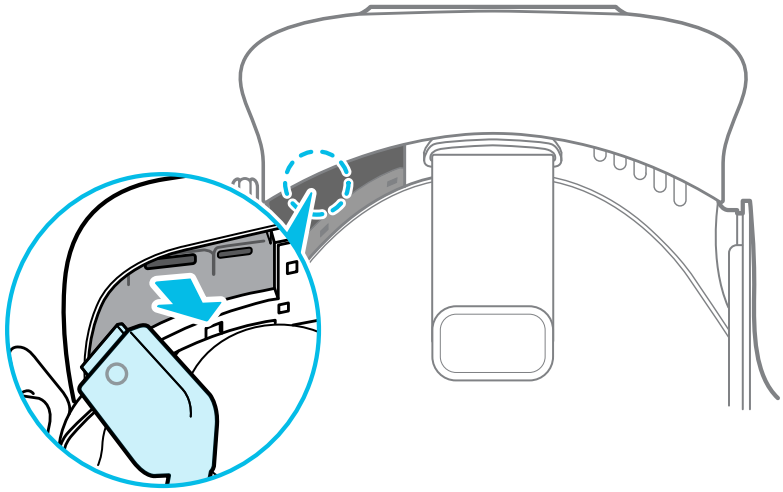

After removing the accessories, the headset you'll send for return should look like the following:

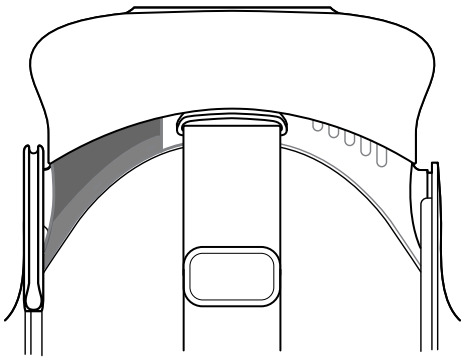

How do I reassemble the headset after repair?

After receiving your repaired headset, properly attach the accessories before using your headset again.

- Reconnect the headset cable.

  1. Press and hold the lens distance button on the headset, and then pull out the visor to its farthest point. For an easier access to the connector slots, pull up the headset strap.

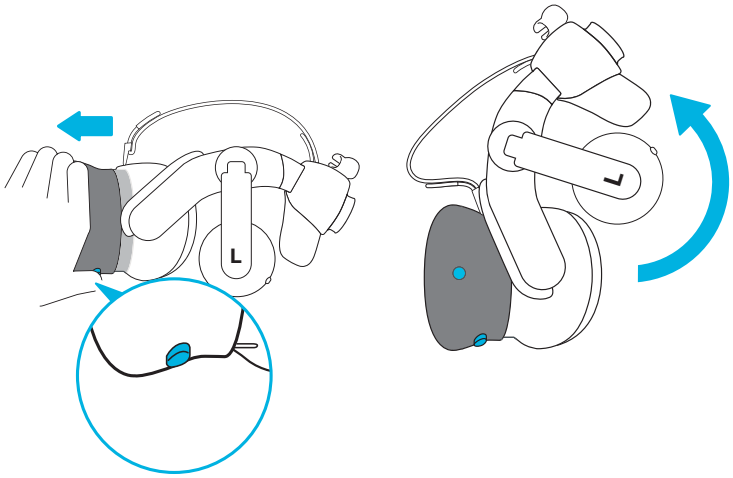

  2. Align and reinsert the headset cable connector (side with round mark up) to the port with the corresponding round mark. You'll hear a click when the connector is fully inserted.

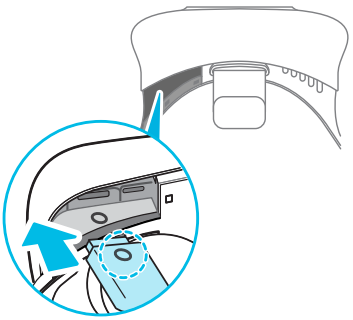

  3. Press and hold the lens distance button on the headset, and then push the visor back to the starting point.
  4. Make sure that the headset cable connector is secured and that the cable is set before the edge of the compartment.

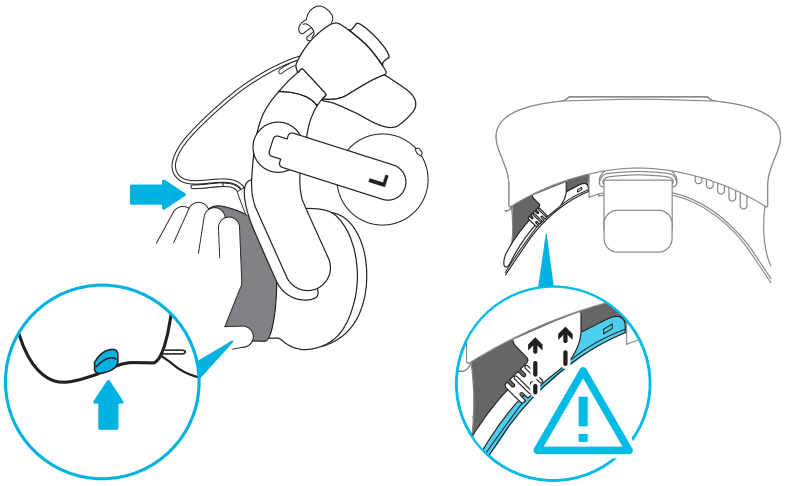

5. Loop the cable around the band of the strap next to it. The stopper on the headset cable should be positioned before the ridge. Make sure that the headset cable passes through the ridge and the cable clip at the back of the headset.

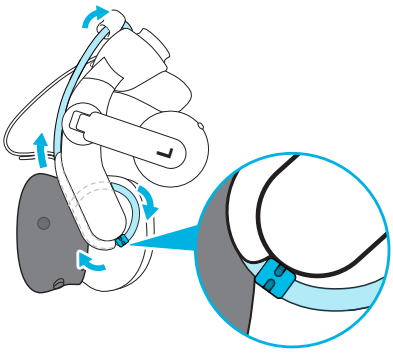

- Replace the compartment cover. Align the tabs on the cover with the holes on the compartment, and then push the cover until it snaps in place.

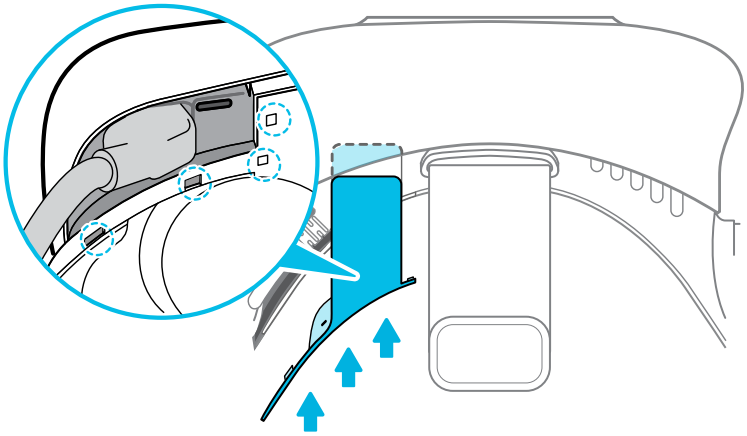

- Reattach the face cushion. Insert the tab on the face cushion into the slot on the headset, and then align the hook and loop strips.

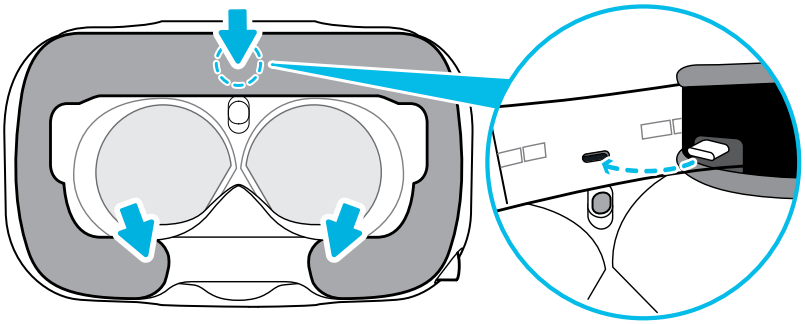

Common solutions

What can I do to troubleshoot the headset?

Try these troubleshooting suggestions.

Option	Description
Check the headset's LED status	▪ If the LED is not lit, try connecting the link box to a different power outlet. ▪ If the LED is dim green, the headset is on standby mode. Activate it by moving the headset or starting a VR app. ▪ If the LED is red, check if you're encountering a cable connection or driver error. For more information, you may refer to this SteamVR Troubleshooting article.
Restart the headset	**1.** From your computer, open the SteamVR app. **2.** Right-click , and then click **Restart headset**. **3.** Wait for the headset to finish restarting.
Check the cable connections	▪ Make sure that your cable connections are securely attached on both ends. ▪ Check that the correct cables are connected to the corresponding side of the link box. ▪ Connect the DisplayPort cable end to the DisplayPort port on your computer's graphics card where the monitor is also connected. Do not connect the DisplayPort cable to ports on the motherboard. ▪ Try connecting to a different USB port.
Restart the link box	For details, see Restarting the link box on page 26. For more information, you may refer to this SteamVR Troubleshooting article.

What can I do when the status light on the headset indicates an error?

If you see that the status light is red, try these methods to resolve the issue:

- Disconnect and reconnect the headset cable on the link box.
- Check that the cables between the link box and your computer are properly connected. Disconnect and reconnect the cables as needed.
- Restart the link box by pressing the Power button to turn it off, and then pressing the Power button again to turn it back on.

For more information, you may refer to the SteamVR Troubleshooting page.

What should I do if the headset is not tracked?

Try the following methods to troubleshoot the issue:

- Make sure that the headset is placed inside the play area.
- Restart the link box by pressing the Power button to turn it off, and then pressing the Power button again to turn it back on. You need to also restart the SteamVR app.
- Try to disconnect and reconnect the DisplayPort cable to the DisplayPort port on your computer's graphic card.
- Restart the SteamVR app. If you still get an error, reboot your computer and reopen the SteamVR app.

For more information, you may refer to the SteamVR Troubleshooting page.

My headset display is blurry. What should I do?

Try these troubleshooting suggestions:

- Make sure that you've removed the protective film on the headset lenses.
- Check that the lenses are clean. Use the cleaning cloth provided in the box to wipe the lenses.
- Make sure that you're wearing the headset properly.

  The headset's bottom edge should rest on your cheekbones, while the standard strap should cup the back of your head. You should feel comfortable bending down without the headset slipping off.

  If the headset is too low on your face, your display will appear blurry.
- Make sure your IPD is set correctly. For a guide, see How can I find my IPD? on page 12.

For more information, you may refer to the SteamVR Troubleshooting page.

What can I do to resolve the "headset not found" error?

Do the following steps to troubleshoot the issue:

1. Close all Steam apps on your computer, including the SteamVR app.
2. Check that the cables between the link box and your computer are properly connected. Disconnect and reconnect the cables as needed.

3. Restart the link box by pressing the Power button to turn it off, and then pressing the Power button again to turn it back on. On your computer, you might see a notification that drivers are being installed. Wait for the installation to finish.
4. Restart the SteamVR app.

If you still get a similar error, repeat the steps again. You can also check if you're encountering a USB-related issue. For more details, see My headset can't be detected due to a USB port issue. What should I do? on page 35.

For more information, you may refer to the SteamVR Troubleshooting page.

My headset can't be detected due to a USB port issue. What should I do?

Do the following steps to troubleshoot the issue:

- Plug the USB cable into a different USB port to confirm if the error is due to a USB port-related issue.
  1. Plug the USB cable into a generic USB 3.0 port.
  2. Open the SteamVR app, and then click ☰ > **Create System Report**.
  3. Make sure that VIVE Pro devices connect via a `USB xHCI` port rather than to a port from a specific manufacturer, which might have a compatibility issue with VIVE Pro.

  If the error is not resolved, your issue may not be due to USB port compatibility.
- Manually update the USB driver on your computer. You can also download and install official driver updates from the website of your motherboard or USB port manufacturer.

  If updating your USB driver doesn't solve the error, purchase and use another PCI-Express USB card (with Intel chipset). Based on our tests, this USB card works well with VIVE Pro:

  Inateck® 2-Port USB 3.0 PCI-Express Card (Serial: KTU3FR-2O2I)

  For more information, you may refer to the SteamVR Troubleshooting page.

After upgrading to Windows 10, VIVE shows as the computer's main monitor. What should I do?

Try the following steps to troubleshoot the issue:

1. Disconnect the headset cable on the link box.
2. Restart your computer.
3. Reconnect the headset cable on the link box.

I'm experiencing skipped frames. What could I do?

If you've installed software in your computer that automatically adjusts the display (such as for night mode), it may be causing the conflict.

To resolve the issue, disable the software that may cause the conflict (such as f.lux or Prismatik) when using VIVE.

I'm seeing drifting motion or floating objects in VR. What could I do?

Try these troubleshooting suggestions.

- Make sure that there are no reflective surfaces (such as mirrors) within your play area.
- If there are Bluetooth® devices in the room, turn them off so that they don't interfere with hardware pairing.
- Check if you're having CPU performance issues. On the SteamVR app, click ☰ > **Display Performance Graph**.

If you see spikes in the graph, it means that the issue is with the CPU.

Can I use the USB Type-C earphones that came with my HTC phone?

USB Type-C earphones such as from HTC U11 are compatible with VIVE Pro.

However, HTC accessories such as the USB Type-C to 3.5mm adapter only works with smartphones.

Is there a way to also hear from the computer what's in VR?

You can duplicate the audio from VIVE Pro to your computer. You can use another pair of headphones or speakers.

1. From your computer, open the SteamVR app.
2. Click ☰, and then select **Settings** > **Audio**.
3. Click the Audio mirroring **On/Off** switch to turn it on.
4. In the drop-down list, choose the device where you want the audio from VIVE Pro duplicated.

What can I do if the headset's dual camera won't turn on?

If you are using Windows 10, disable the power saver settings.

1. From your computer, open the Device Manager.
2. Under Universal Serial Bus controllers, find and right-click **Generic SuperSpeed USB Hub RI**, and then select **Properties**.
3. To make sure that this is the VIVE Pro device, click the Details tab, and then confirm that the VID/PID value contains the string `0BB4/030E`.
4. Click the Power Management tab, and then de-select **Allow the computer to turn off this device to save power** option.

What should I do if there's cracking noise from the headset earphones?

When this happens after the headset reactivates from standby mode, unplug and replug the USB 3.0 cable on the link box.

What can I do if the headset connection status is unstable?

Make sure that you're not connecting to a USB port on your computer that's labeled for a specific function, such as for USB BIOS Flashback, by its manufacturer. When the issue happens, try connecting to another USB 3.0 port on your computer.

The headset display suddenly turns blank. What can I do?

If you're using an NVIDIA graphics card and you've recently updated your driver, rollback to an older version of the driver (such as `388.xx`) to resolve the issue.

How do I install the driver updates for the VIVE Pro dual camera on Windows 7?

If you are using Windows 7, you'll need to install driver updates to use the dual cameras.

You can download the driver updates from this link.

1. From your computer, open the Device Manager.
2. Under Imaging devices, find and right-click **VIVE Pro Multimedia Camera**, and then select **Properties**.
3. Click **Update driver software**.
4. When prompted, click **Browse my computer for driver software**.
5. Browse to the file folder where you've downloaded the driver updates, and then select `AITDrvWDF.inf`.
6. When prompted, confirm the installation. Once the update has been applied, the string in Device Manager will change to **VIVE Pro Camera**.

Base stations

About the VIVE base stations

The hardware may be purchased separately from the Accessories tab on www.vive.com/product/.

- The base stations beam signals to the headset and controllers. Do not cover the front panel with any material.
- When the base stations are turned on, they may affect some nearby infrared sensors, such as those used by an IR TV remote control.

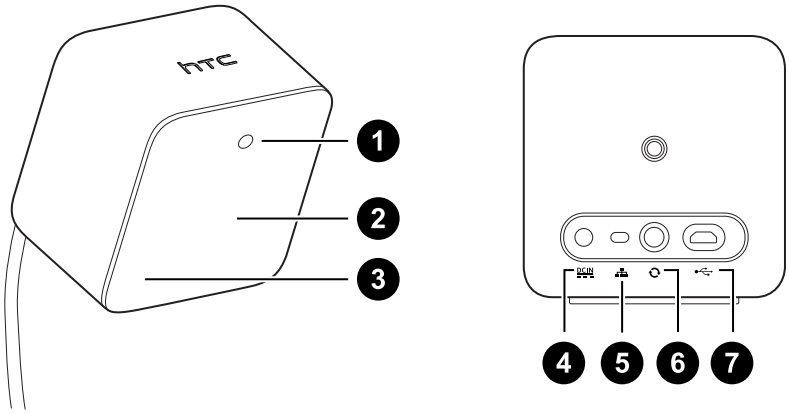

1	Status light
2	Front panel
3	Channel indicator (recessed)
4	Power port
5	Channel button
6	Sync cable port (optional)
7	Micro-USB port (for firmware updates)

- Do not attempt to pry open the base stations as doing so could injure you or damage the product.
- If the front panel is cracked or damaged, stop using the base stations.

Installing the base stations

The hardware may be purchased separately from the Accessories tab on www.vive.com/product/.

Before installing the base stations, decide first whether you want to set up a room-scale or seated/standing-only play area. See Planning your play area on page 53.

During unboxing, remove the thin film that covers the front panel of the base stations.

1. Mount the base stations diagonally at opposite corners of your space.

   For details on how to use the mounting kit, see Using the mounting kit on page 42.

   You can also use tripods, light stands, or cargo poles when mounting the base stations, or even place it on stable book cases. Just avoid using unstable mounting solutions or surfaces that are prone to vibration.

2. Adjust the base stations so that the front panels are facing toward the center of the play area.

3. Attach the power cables to the base stations, and then plug them each into a power outlet to turn them on. The status lights should be green.

4. Connect the base stations and set the channels.

For details on how to order the sync cable, contact customer care.

Without the sync cable	Press the Channel buttons at the back of the base stations so that one base station is set to channel “b”, while the other is set to channel “c”.
With the sync cable (optional for added reliability)	Press the Channel buttons at the back of the base stations so that one base station is set to channel “A”, while the other is set to channel “b”.

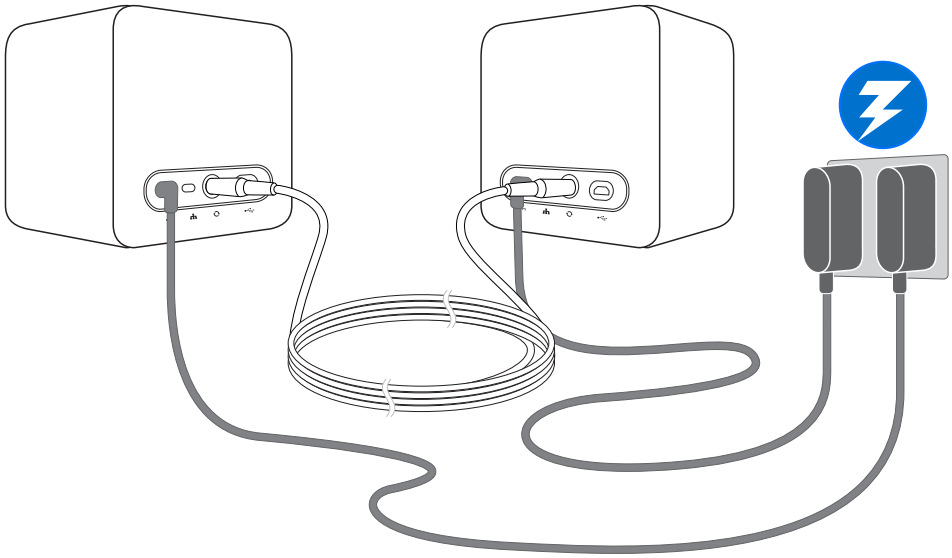

Once turned on, do not move or adjust the angles of the base stations as it could disrupt the tracking process. Otherwise, you will need to set up the play area again.

Tips for setting up the base stations

The hardware may be purchased separately from the Accessories tab on www.vive.com/product/.

You may set up the base stations in a way that's suitable for your place. For best results, you may follow these recommendations:

- Mount the base stations diagonally and above head height, ideally more than 2 m (6 ft 6 in).
- Secure the base stations in a location where they can't be easily jostled or moved.
- Each base station has a 120-degree field of view, so it's ideal to adjust its angle between 30 and 45 degrees to fully cover your play area.
- For optimal tracking, make sure that the maximum distance between the two base stations is 5 m (16 ft 4 in).

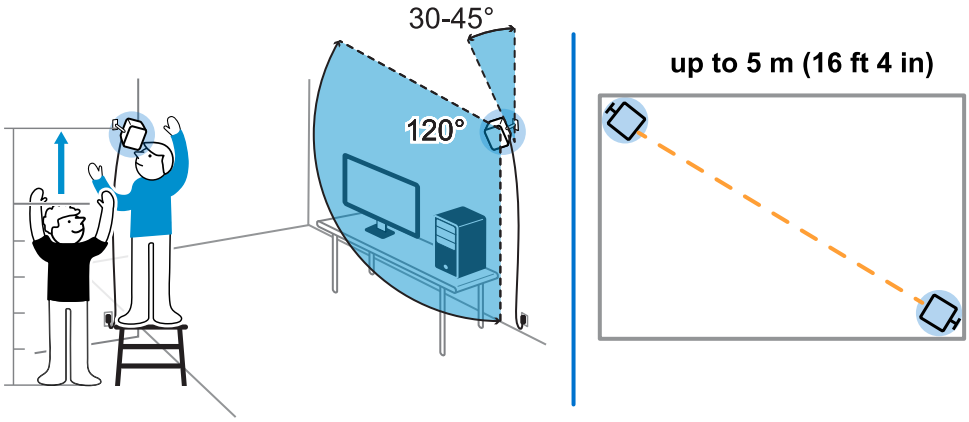

- Avoid setting up in an area with bright light, which may negatively affect the performance of the base stations.

Using the mounting kit

For best results, install the base stations using a mounting kit. If you previously bought first-generation VIVE hardware, the mounting kit is provided as an in-box item. Otherwise, you can separately purchase a similar mounting kit from a third-party supplier.

You will need a screwdriver or drill to install the mounts. Ask a professional for help when using power tools.

1. Mark where you want to install each of the mounts on your wall, and then screw the mounts in.

   When mounting on concrete or drywall, first drill ¼ inch holes and insert anchors before screwing mounts in.

2. Rotate the base station to screw it onto the threaded ball joint. Do not screw the base station all the way in, only enough to be stable and oriented correctly.

3. Tighten the wingnut to the base station to secure it in place.

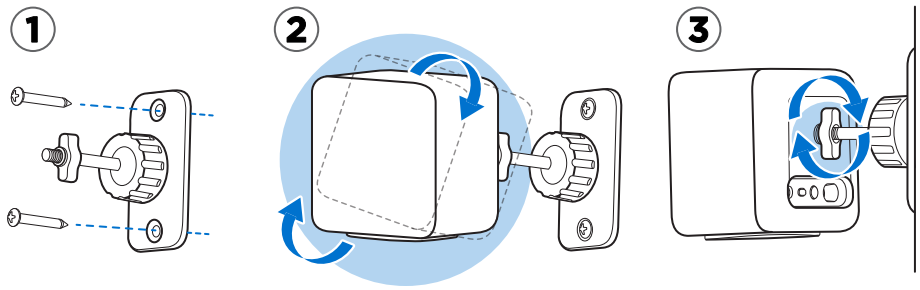

4. To adjust the angle of the base station, loosen the clamping ring while carefully holding the base station to prevent it from falling.

5. Tilt the base station toward the play area.

   Make sure it has an unobstructed view of the other base station. Each base station has a 120-degree field of view. They should be angled down between 30 and 45 degrees.

   To fix the angle of the base station, tighten the clamping ring back in.

6. Attach the power cable to each base station.

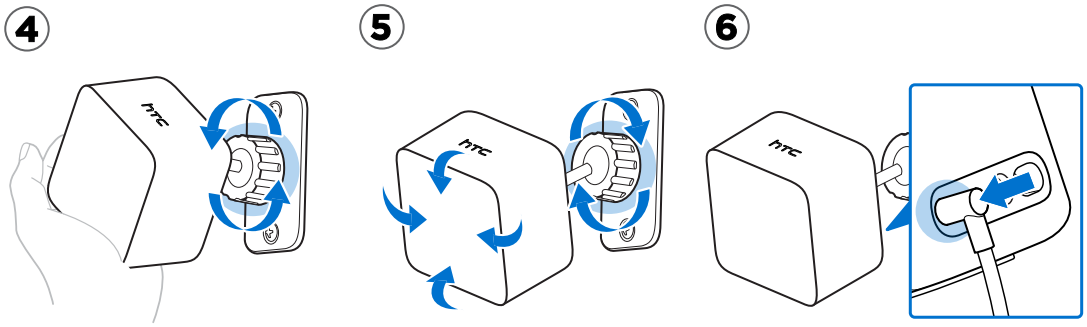

Updating base station firmware via cable connection

The hardware may be purchased separately from the Accessories tab on www.vive.com/product/.

1. From your computer, open the SteamVR app.
2. If you see the icon, mouse over it to check if the firmware is out of date. If so, click **Update Device**.
3. Unplug the base stations from their power adapters, and then carefully unmount them.
4. Using a micro-USB cable, connect the base stations to one of your computer's USB ports one at time.
5. While pressing the Channel button at the back of the base station, plug in the base station's power adapter.

   Once the base station is detected by the SteamVR app, the firmware update will start automatically.

Do not unplug the micro-USB cable or power cable before the firmware update is complete. Doing so could result in a firmware error.

6. When the update is complete, click **Done**.

Updating base station firmware via Bluetooth

The hardware may be purchased separately from the Accessories tab on www.vive.com/product/.

1. From your computer, open the SteamVR app.
2. Click > **Devices** > **Bluetooth Settings** > **Enable Bluetooth** .

If the Bluetooth driver for the link box needs to be updated, click **Update Bluetooth Driver**. After installing the Bluetooth driver, restart the computer and relaunch the SteamVR app.

3. Do one of the following:
   - Click > **Devices** > **Update Device**, and then select the base stations.
   - If you see the icon, mouse over it to check if the firmware is out of date. If so, click **Update Device**.
4. Follow the onscreen instructions to complete the process.

Do not unplug the power cable before the firmware update is complete. Doing so may result in a firmware error.

What does the status light on the base stations mean?

The hardware may be purchased separately from the Accessories tab on www.vive.com/product/.

The status light shows:

- Green when the base station is in normal mode
- Blue when the base station is waiting to stabilize. If it remains in this state, check if it is mounted securely or on a surface that's not prone to vibration.
- Dim green when the base station is on standby
- Purple when the base stations are trying to sync
- Blinking purple when syncing is blocked. If you're connecting the base stations wirelessly, you may need to use the sync cable. See Do I need to use the sync cable? on page 45.

What should I do if any of the base stations is not detected?

The hardware may be purchased separately from the Accessories tab on www.vive.com/product/.

Try the following methods to troubleshoot the issue:

- Turn the base station off and on again.
- Make sure that you've installed your base stations correctly. For details, see Installing the base stations on page 39.
- If the base stations have trouble wirelessly syncing with each other, there might be an obstruction in your play area. Check if using the sync cable would solve your issue. For details, see Do I need to use the sync cable? on page 45.
- Restart the SteamVR app. If you still get an error, reboot your computer and reopen the SteamVR app.

For more information, you may refer to the SteamVR Troubleshooting page.

Can I use the older version of the base stations together with SteamVR Base Station 2.0?

The hardware may be purchased separately from the Accessories tab on www.vive.com/product/.

No, they are not compatible. SteamVR Base Station 2.0 has a different method of syncing. Use only the same versions of the base stations in your play area so that your setup will work correctly.

Which VIVE hardware is compatible with my base stations?

Use only the same version of base stations together. Different base station versions are not interchangeable.

Check the table below to see which VIVE hardware you can use with your base stations:

Base station version	Compatible VIVE hardware
1.0	▪ VIVE headset ▪ VIVE Pro headset ▪ VIVE Pro Eye headset ▪ VIVE controllers ▪ VIVE controllers (2018) ▪ VIVE Tracker (2018) ▪ VIVE Cosmos with VIVE Cosmos External Tracking Faceplate ▪ VIVE Cosmos Elite headset
2.0	▪ VIVE Pro headset ▪ VIVE Pro Eye headset ▪ VIVE controllers (2018) ▪ VIVE Tracker (2018) ▪ VIVE Cosmos with VIVE Cosmos External Tracking Faceplate ▪ VIVE Cosmos Elite headset

Do I need to use the sync cable?

The hardware may be purchased separately from the Accessories tab on www.vive.com/product/.

In general, you don't need to connect your base stations to each other with the sync cable. However, if you have a hanging object from the ceiling that is above the play area or if your base stations need to be positioned low such that your head or hands block the bases from seeing one another, this may affect the syncing of the base stations. You'll need to attach the sync cable.

1. Attach the sync cable to both base stations and make sure to route the cable outside of your play area.

2. Press the Channel buttons on the back of the base stations so that one base station is set to channel "A" and the other is set to channel "b".

Are the base stations covered by warranty if accidentally damaged?

> The hardware may be purchased separately from the Accessories tab on www.vive.com/product/.

Please follow the recommended setup instructions for the base stations carefully, since product warranty does not cover accidental damage.

Stop using the base stations if they are damaged, especially if its front panels are cracked.

When VIVE Pro is in use, my TV remote isn't working. What can I do?

> The hardware may be purchased separately from the Accessories tab on www.vive.com/product/.

The base stations may affect some nearby infrared sensors, such as those used by an IR TV remote control.

1. Re-adjust the angle of the base stations so that they are not directly facing your TV.
2. Verify that your remote control is working without interference from VIVE Pro.
3. Set up the play area again.

For more information, you may refer to the SteamVR Troubleshooting page.

Controllers

About the VIVE controllers

The hardware may be purchased separately from the Accessories tab on www.vive.com/product/.

Use the controllers to interact with objects in the VR world.

The controllers have sensors that are tracked by the base stations.

The sensors on the controllers are sensitive. Do not cover or scratch the sensor lenses.

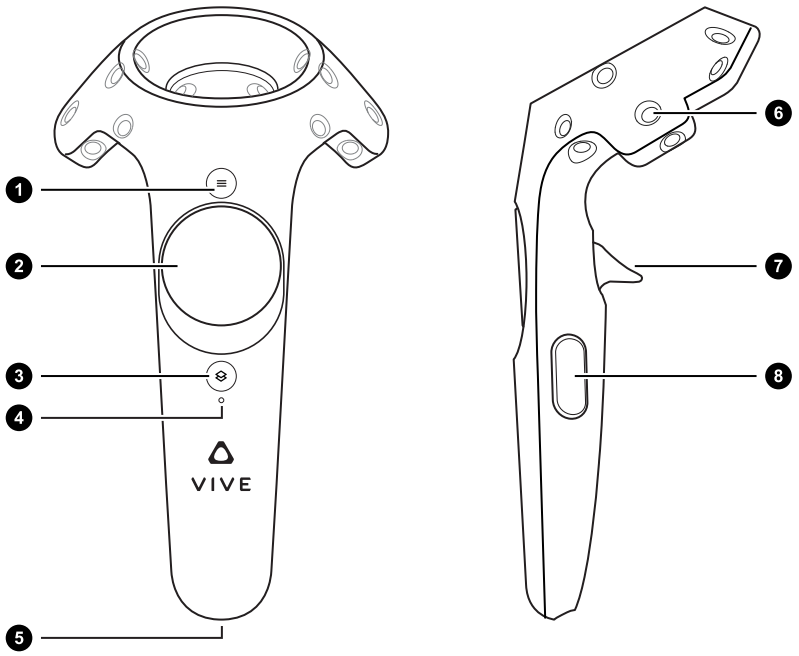

1	Menu button
2	Trackpad
3	System button
4	Status light
5	Micro-USB port
6	Tracking sensor

7	Trigger
8	Grip button

Charging the controllers

The hardware may be purchased separately from the Accessories tab on www.vive.com/product/.

You can check the battery level of the controllers when no apps are running, or when the System Dashboard is up. When the battery is low, the indicator will show a single red dot •••• .

You can also check the SteamVR app. If you see , this means the controller battery is low.

Charge each controller using the provided power adapters and USB cables.

When the controller is plugged in and fully charged, its status light shows green if the controller is on or white if the controller is off.

Turning the controllers on or off

The hardware may be purchased separately from the Accessories tab on www.vive.com/product/.

- To turn the controller on, press the System button until you hear a beeping sound.
- To turn the controller off, press and hold the System button until you hear a beeping sound.

  When you quit the SteamVR app, the controllers will automatically turn off. The controllers will also automatically turn off after being idle for a period of time.

Pairing the controllers with the headset

The hardware may be purchased separately from the Accessories tab on www.vive.com/product/.

- Once the controllers are turned on for the first time, they will automatically pair with the headset.

  The status light shows as blinking blue while the pairing is in progress. The status light turns solid green when the controllers are paired with the headset.
- To manually pair the controllers, launch the SteamVR app, tap ☰, and then select **Devices** > **Pair Controller**. Follow the on-screen instructions to complete the process.

Attaching the lanyards to the controllers

The hardware may be purchased separately from the Accessories tab on www.vive.com/product/.

Using the lanyards may help prevent the controllers from accidentally being dropped; however, please do not fling or violently throw the controller because the lanyard may break.

1. While holding the controller, insert the lanyard's thread from the top to the bottom hole.
2. Loop the lanyard through the thread, and then tug the lanyard to fasten it in place.
3. Place the lanyard on your wrist, and then adjust the lock to tighten the lanyard comfortably around your wrist.

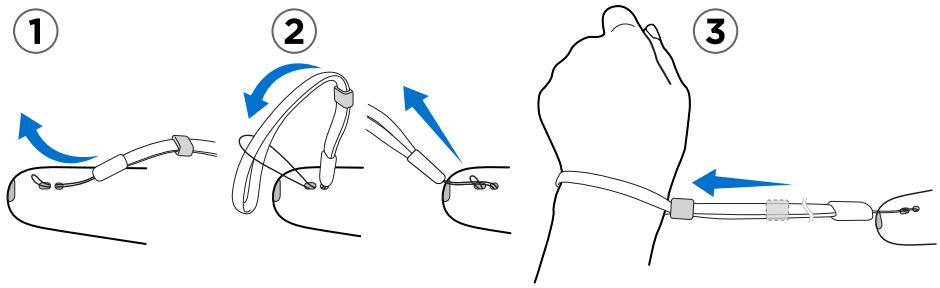

Updating controller firmware

The hardware may be purchased separately from the Accessories tab on www.vive.com/product/.

1. From your computer, open the SteamVR app.
2. If you see the icon, mouse over it to check if the firmware is out of date. If so, click **Update Device**.
3. Using a micro-USB cable, connect the controllers to one of your computer's USB ports one at time.

   Once the controller is detected by the SteamVR app, the firmware update will start automatically.

! Do not unplug the micro-USB cable any time before the firmware update is complete. Doing so could result in a firmware error.

4. When the update is complete, click **Done**.

What does the status light on the controllers mean?

The hardware may be purchased separately from the Accessories tab on www.vive.com/product/.

The status light shows:

- Green when the controller is in normal mode
- Blinking red when battery is low
- Blinking blue when the controller is pairing with the headset
- Blue when the controller is connecting with the headset
- Orange when charging

What should I do if any of the controllers is not tracked?

The hardware may be purchased separately from the Accessories tab on www.vive.com/product/.

Try the following methods to troubleshoot the issue:

- Make sure that the controller is placed inside the play area.
- Turn the controller off and on again to reactivate the tracking.
- Restart the SteamVR app. If you still get an error, reboot your computer and reopen the SteamVR app.

For more information, you may refer to the SteamVR Troubleshooting page.

How do I know which of the controllers is not being tracked?

The hardware may be purchased separately from the Accessories tab on www.vive.com/product/.

If one of your controllers is not being tracked and you want to find out which one, follow these steps.

1. On your computer, open the SteamVR app.
2. Hover your cursor on the icon of the controller that's not tracked.
3. Click **Identify controller**.

The status light on the controller rapidly flashes white.

For more information, you may refer to the SteamVR Troubleshooting page.

What can I do if the controller's trackpad is oversensitive?

The hardware may be purchased separately from the Accessories tab on www.vive.com/product/.

Check if there's a firmware update available for the controllers. After which, re-calibrate the controller by doing these steps:

1. From your computer, open the SteamVR app.
2. Right-click , and then click **Calibrate Controller**.
3. Follow the onscreen prompts to complete the calibration process.

For more information, you may refer to the SteamVR Troubleshooting page.

What should I do if my controller won't turn on?

The hardware may be purchased separately from the Accessories tab on www.vive.com/product/.

Try these troubleshooting suggestions:

- Press and hold the System button for at least 5 seconds and see if the controller turns on.
- Charge the controller using the other cable and adapter, and plug the adapter to a different power outlet.
- On the SteamVR dashboard, check if the controllers are detected. If controllers are detected but the LED light is off, it may indicate an issue with the LED.
- Check if you have a firmware update that failed. To recover from this error, see My controller won't turn on after I accidentally unplugged it during firmware update. What should I do? on page 52.

The controller automatically turns off. What should I do?

The hardware may be purchased separately from the Accessories tab on www.vive.com/product/.

Do the following steps to troubleshoot the issue:

1. Make sure that the controller is charged.
2. Check that the status light on the controller shows as green, which means that it is paired with the headset.

3. Plug the USB cable from the link box into another USB 3.0 port on the computer.
4. Manually update the USB driver on your computer. You can also download and install official driver updates from the website of your motherboard or USB port manufacturer.

My controller won't turn on after I accidentally unplugged it during firmware update. What should I do?

The hardware may be purchased separately from the Accessories tab on www.vive.com/product/.

Do the following steps to recover your controller from bootloader mode.

1. Using a micro-USB cable, connect the controller to one of your computer's USB ports.
2. From your computer, open the SteamVR app.
3. Once the controller is detected by the SteamVR app, follow the onscreen prompts to complete the firmware update.

Play area

What is the play area?

The play area sets the virtual boundaries of VIVE Pro. Your interaction with VR objects happens within the play area.

VIVE Pro is designed for room-scale setup, but you can also use it for standing and seated experiences.

Planning your play area

Before choosing your setup, make sure that you have enough space.

Room-scale setup needs a minimum play area of 2 m x 1.5 m (6 ft 6 in x 5 ft). Examples of room-scale setup:

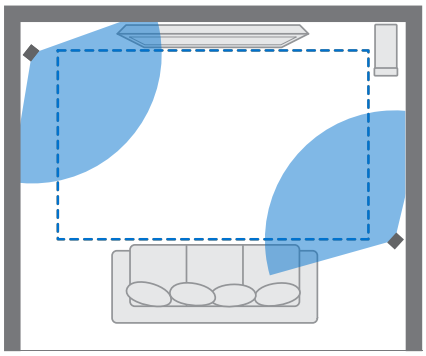

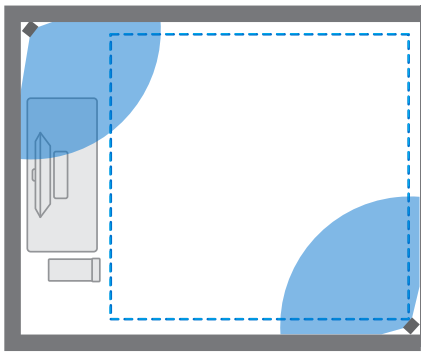

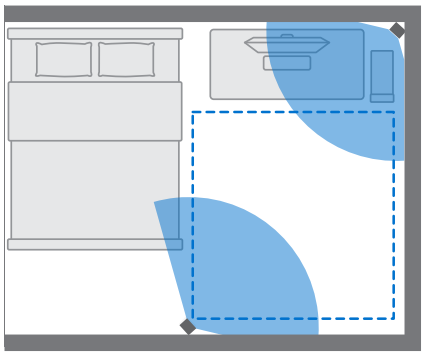

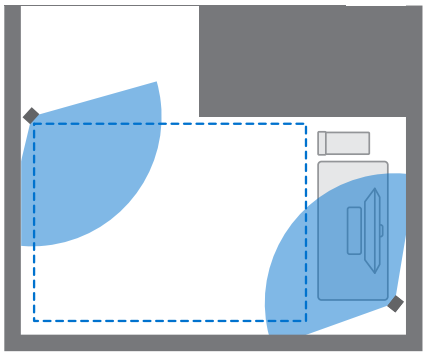

Seated and standing experiences do not have space requirements. Examples of seated/standing setup:

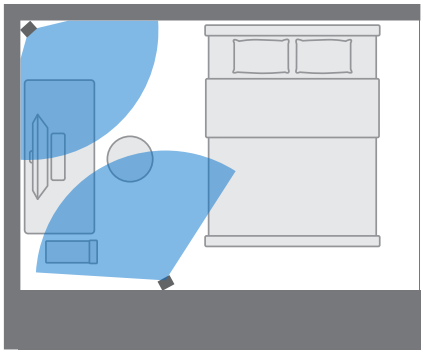

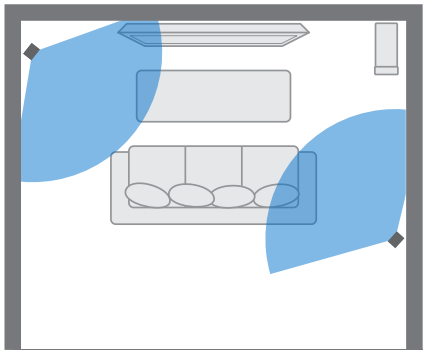

Choosing the play area

Find a space that you will designate as the play area. For best results, do the following:

- Move furniture and other obstacles (like pets) out of the play area.

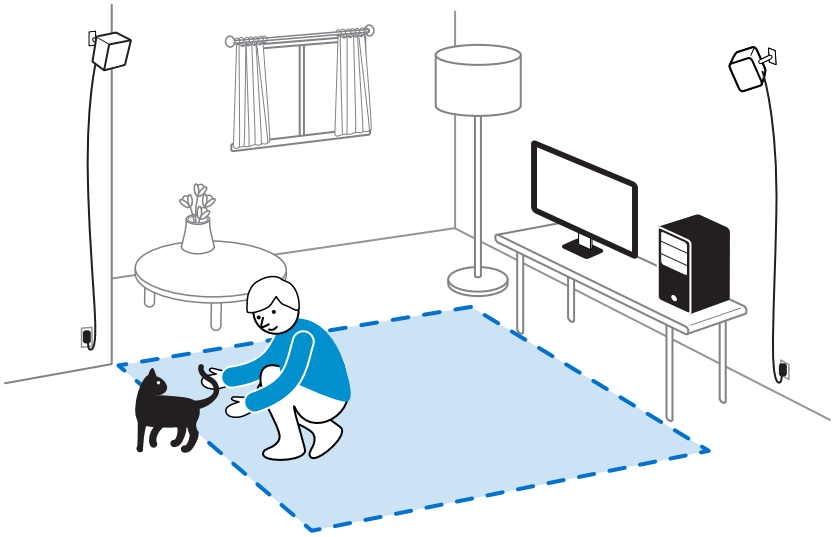

- Place your computer next to your play area. The headset cable extends around 5 m (16 ft 4 in) from your computer.
- Make sure that there are power outlets close to where you mount the base stations. Use 12V extension cords as needed.
- Do not leave your headset in direct sunlight, as it may damage your headset display.

Setting up VIVE Pro HMD for the first time

Before you can use VIVE Pro HMD, you'll need to complete the setup process, which includes installing VIVE and SteamVR software, setting up the hardware, and defining your play area.

To start the setup process, download the setup file on your computer from:

www.vive.com/setup/vive-pro-hmd/

Run the setup file and follow the prompts to complete the process.

Once you've completed the room setup, you need to run it again if you moved or adjusted the angles of the base stations or if you transfer your VIVE VR system to a different room.

Setting up a standing-only play area

Choose this option if you only want to experience VR in a seated or standing position.

1. From your computer, open the SteamVR app.
2. Click ☰, and then select **Room Setup** > **Standing only**.
3. Review the prompts and follow the on-screen instructions to complete the process.

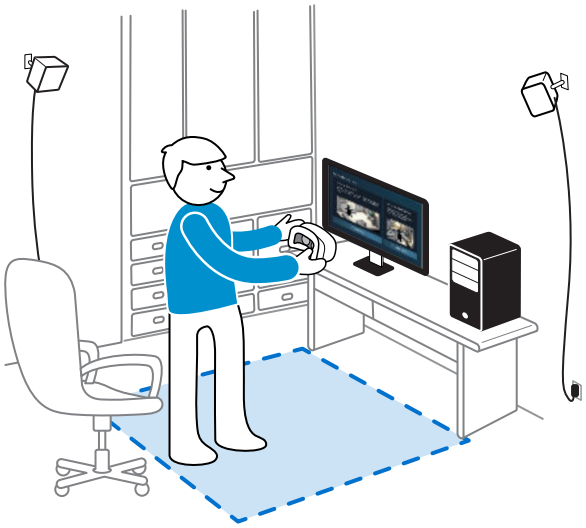

Setting up a room-scale play area

Choose to set up a room-scale play area to enjoy moving around and fully engage with the VR experience.

1. From your computer, open the SteamVR app.
2. Click ☰, and then select **Room Setup** > **Room-scale**.
3. Review the prompts and follow the on-screen instructions to complete the process.

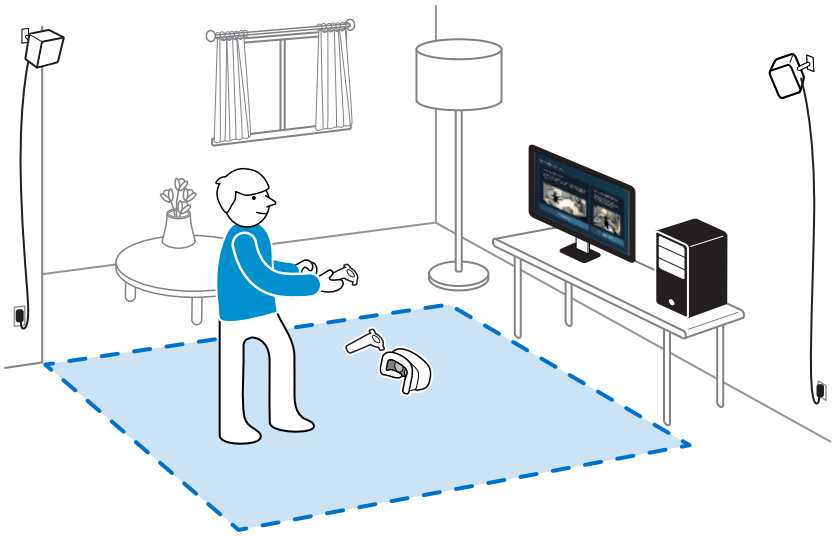

! When tracing the boundaries of the play area, make sure that the floor is cleared. Do not trace across space occupied by things (such as a table or a chair) since this may cause you to trip into the object while in VR.

Resetting the play area

1. From your computer, open the SteamVR app.
2. Click ☰, and then select **Room Setup**.
3. Choose the type of play area you want and then follow the prompts to complete the process.

Verifying your setup

Once you've completed the VIVE setup process, you can now put on the headset and hold the controllers to start exploring VR.

While you're in the play area, the headset and the controllers should remain at least 0.5 m (1 ft 7 in) away from a base station. This will ensure that the devices are properly tracked within the base station's 150-degree horizontal field of view and 110-degree vertical field of view.

> **!** For health and safety warnings, please refer to the Safety and regulatory guide, which is periodically updated for accuracy and completeness. For the latest version, check www.vive.com/.

After setting up, how do I turn the VIVE system on?

1. From your computer, open the SteamVR app.
2. Make sure your base stations are powered.
3. Make sure that your headset is connected to the computer via the link box. For details, see Connecting the headset to your computer on page 25.
4. Turn the controllers on.
5. Check that VIVE hardware is tracked. The status icons on the SteamVR app should be blue and the status lights on the hardware should all be green.
6. Put the headset on. For details, see Putting on the VIVE Pro HMD on page 9.
7. Grab your controllers.

To bring up the System Dashboard, press the System button on either controller.

What is the recommended space for the play area?

Movement within a diagonal area of up to 5 m (16 ft 4 in) is supported. For example, a 3.5 m x 3.5 m (around 11 ft 5 in x 11 ft 5 in) space. For room-scale setup, a minimum play area of 2 m x 1.5 m (6 ft 6 in x 5 ft) is required. There's no minimum for seated and standing experiences.

Can I include space occupied by furniture for the play area?

It is not recommended to do so. When setting the boundaries of the play area, make sure that the floor is cleared. Do not trace across space occupied by things (such as a table or a chair) since this may cause you to trip into the object while in VR.

Will VR apps that are for limited spaces or stationary experiences only work with a room-scale setup?

Even if you have a room-scale setup, you can still use VR apps that are designed for limited spaces or are stationary experiences. Just make sure that your headset and controllers are tracked within the play area.

How do I resolve download errors during VIVE Setup installation?

Download errors are usually caused by incorrect network settings. For example, due to wrong DNS, the download server address is unresolved by the host. Some network destinations may be inaccessible, even as connection to other websites seems normal. Please make sure that your network settings are correct, or ask your network administrator for support.

I can't complete the room setup. What should I do?

Check if you're using special characters (such as à or é) in your local Windows user name, which could cause the problem.

As a workaround, you can add a new Windows account using basic Latin alphabet for your user name. After logging in with the new user name, reinstall VIVE Setup and complete the process.

Settings

Audio settings

What are the audio settings?

Take control of how you experience sound while you're in VR.

Change the **Audio mode** to suit your needs. Select from the following:

Default	Choose this to only hear sounds in VR.
Conversational	Hear foreground sounds from your room while in VR. Choose this if you need to talk and listen to other people while in VR.
Ambient	Hear background sounds from your room while in VR. Choose this if you're expecting someone to call or ring your door bell.

Turn on **Sound Boost** to enhance the sound quality if you're going to use your own headphones with the headset.

Changing the audio mode

Choose a predefined audio mode to change how you hear sounds from the real while in VR. To learn more about the different modes, see What are the audio settings? on page 59.

1. While in VR, press the System button on one of the controllers to open the System Dashboard.
2. Select **VIVE** to go to the VIVE Dashboard.
3. On the right-most panel, select 🎧.
4. Select **Audio mode**, and then choose the mode you want.

Once you change to another audio mode, the setting will be applied to the next VR content that you'll launch. To revert to the original settings, choose **Default**.

Enhancing the sound quality of third-party earphones

Enable **Sound Boost** to enhance the sound output while you're using third-party high-impedance earphones with the headset.

- Remove the built-in earphones from the headset before using your own earphones. To find out how, see Removing the headset earphones on page 18.
- You need a USB Type-C to 3.5mm adapter to use third-party earphones.

1. While in VR, press the System button on one of the controllers to open the System Dashboard.
2. Select **VIVE** to go to the VIVE Dashboard.
3. On the right-most panel, select 🎧.
4. Select **Headphone output** > **Sound Boost**.
5. To preview the changes, select the speaker icon.

! Listening at a high volume for an extended period of time may damage your hearing.

System Dashboard settings

System Dashboard

The System Dashboard serves as your central point of entry in VR.

While in the dashboard, some of the things you can do are:

- Launch or close a VR app
- Control sound volume and mic access
- Change settings, such as style of the collision bounds in Chaperone or the in-headset background
- Turn the VIVE Pro system off

To bring up the dashboard, press the System button on either controller.

Changing the Chaperone settings

The Chaperone shows a grid whenever you're close to the bounds of your play area. You can change how the grid looks.

1. From the System Dashboard, select ⚙.
2. Select **Play Area**.

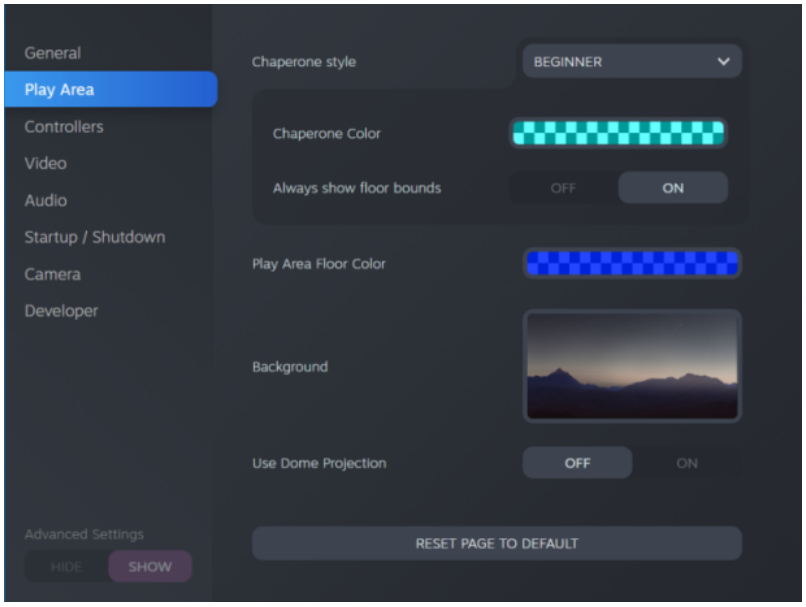

3. In Chaperone style, choose the collision bound style you want.
4. Click colored box to the right of Chaperone Color to set the color and transparency of the bounds.
5. To show a constant visual reference of your floor bounds while in VR, select the Always show floor bounds **On/Off** switch to turn it on.

You can also change the Chaperone settings in the SteamVR app.

Changing the default background display

When you turn on the VIVE system, the first thing you'll see is a default background display. It's the same background that shows when you exit SteamVR Home.

1. From the System Dashboard, select ⚙.
2. Select **Play Area**.

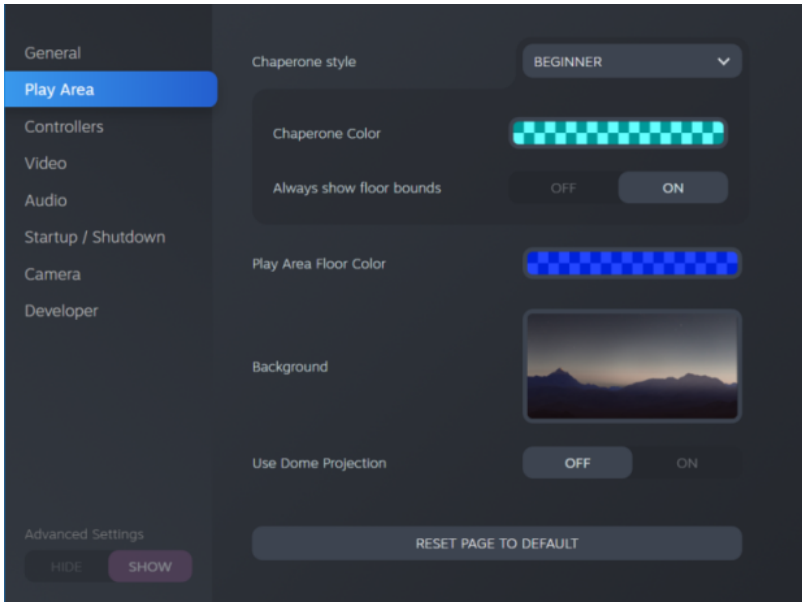

3. Click the image to the right of Background.
4. Select the image you want to use as the background.

For some images, you have the option to turn on Use Dome Projection to make it appear like you're in a planetarium.

5. Click the box to the right of Play Area Floor Color to add color to the floor of your play area.

You can also change the background in the SteamVR app.

Phone notifications

Downloading and installing the VIVE phone app

ANDROID APP ON Google play

Download on the App Store

Before downloading the VIVE app, please make sure that your phone meets the minimum system requirements indicated on the VIVE app's download page.

1. On your phone, open the Play Store or App Store apps.
2. Search for `Vive`.
3. Download and install the VIVE app.

Pairing your phone with VIVE

Pair your phone with the VIVE system to start receiving notifications while you're on VR.

1. On your computer's VIVEPORT app, click ⚙, and then select **Set up a Phone**.
2. On your phone, open the VIVE app.

   The first time that you open the VIVE app, review the prompts and tap **Allow**.
3. On both your computer and phone, click **Get started**. Make sure that Bluetooth is turned on and that your phone is discoverable.
4. From the list of discovered devices on your computer, select your phone, and then click **Next**.
5. When prompted, accept the pairing request or enter the pairing code on your phone.
6. Once pairing is complete, click **OK** and **Done** on your computer and phone respectively.

Choosing which notifications to receive on VR

Manage which notifications you get while using VIVE.

1. On your phone, open the VIVE app.
2. Do one of the following:
   - Android™ users: Tap ⋮ > **Settings**.
   - iOS users: Switch to the Settings tab.
3. Choose which types of notifications you'd like to receive.

Receiving notifications while in VR

Don't worry about missing important notifications. While you're in any VR app, you'll see a notification when you have an incoming call, message, or upcoming calendar event.

> To receive notifications while in VR, you need to pair your phone with VIVE Pro first. To find out how, see Pairing your phone with VIVE on page 63.

To receive or open the notification, press the **System** button.

If you choose to ignore the incoming notification, you can always check it later on the VIVE tab. For details, see Checking your notifications on page 64.

Checking your notifications

Conveniently review notifications from your phone without leaving VR.

> To receive notifications while in VR, you need to pair your phone with VIVE Pro first. To find out how, see Pairing your phone with VIVE on page 63.

From the VIVE tab's Notifications panel, you can:

- View a missed call or text message
- View an upcoming calendar event
- Call back a contact
- Reply with a text message (Android users only)

Editing or adding message replies (Android users)

If you're using an Android phone, customize the messages that you can quickly send to your contacts.

1. On your phone, open the VIVE app.
2. Tap ⋮ > **Settings**.
3. Tap **Quick replies**.
4. Select a predefined message to edit or tap + to add a custom message.

Unpairing your phone with VIVE

You can only use one phone at a time with your VIVE Pro. Unpair your current phone first if you need to use another phone with VIVE Pro.

1. On your phone, open the VIVE app.
2. Do one of the following:
   - Android users: Tap ⋮ > **Settings**, and then tap **Unpair**.
   - iOS users: Switch to the Settings tab, and then tap **Forget this device**.

> You can also unpair your phone through your computer's VIVEPORT app. Click ⚙, and then click **Unpair** under Phone.

What types of phone notifications can I receive on VIVE Pro?

While in VR, you may receive phone calls, text messages, and calendar reminders. To do so, you need to install the VIVE app on your phone and complete the pairing process with the VIVE Pro system. You can choose which notifications you want to get on your phone's VIVE app settings.

Can I receive notifications from more than one phone on VIVE Pro?

Currently, only one phone is supported if you want to receive notifications while in VR. If you want to use another phone with your VIVE Pro, unpair the previous phone first.

What features of the VIVE phone app are not supported in the iOS version?

Currently, editing or adding personalized replies for calls or messages are not supported in the app's iOS version.

SteamVR

Activating the dual camera

You need to enable the settings for the dual camera of VIVE Pro before you can use it in VR.

1. From your computer, open the SteamVR app.
2. Click ☰, and then select **Settings** > **Camera**.
3. Click the Enable Camera **Enable/Disable** switch to turn it on.
4. Click the **Restart SteamVR** button to restart the SteamVR app.

5. Click ☰, and then select **Settings** > **Camera**.

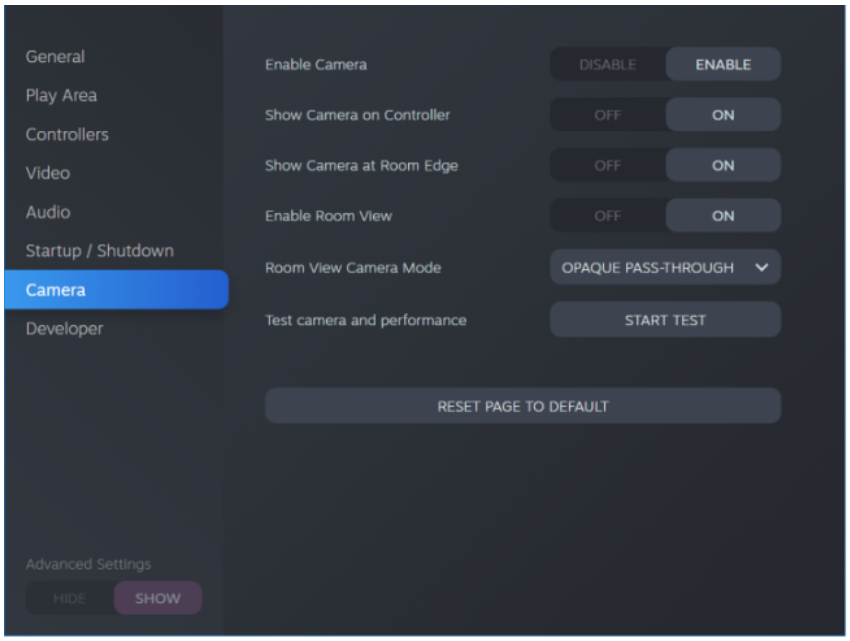

6. Turn on the options you want.

   - **Show Camera on Controller** A screen appears beside the controller to show your actual surroundings.
   - **Show Camera at Room Edge** Shows your actual surroundings when you get close to your play area boundaries.
   - **Enable Room View** Press the System button twice anytime to show your actual surroundings. Press the System button twice again to go back into VR.

When you turn on **Show Camera at Room Edge** or **Enable Room View**, you can choose how your actual surroundings will look like in **Room View Camera Mode**.

Checking for firmware updates

Firmware updates include improved features and bug fixes.

1. From your computer, do one of the following:

   - On the SteamVR status window, mouse over on any of the hardware icons to check if the firmware is out of date, and then select to update the firmware.
   - On the SteamVR app, click ☰, and then click **Devices** > **Update Device**.

2. Follow the prompts on the screen.

   If the update is for the controllers or base stations, you'll be asked to connect them to your computer using a micro-USB cable.

! While firmware updates are in progress, do not unplug the micro-USB or power cables that connect your hardware to your computer. Doing so could result in a firmware error.

How can I capture screenshots in VR?

While in VR, press the System button and the trigger at the same time. You'll see a notification when the screenshot is saved.

You can access screenshots directly from the Steam client by clicking **View** > **Screenshots**.

To find screenshots from apps downloaded in VIVEPORT, navigate to the Steam installation folder. The default location on 64-bit versions of Windows is:

```
C:\Program files (x86)\Steam\userdata\[Steam user number]\760\remote
\0\screenshots
```

If you have chosen a custom installation folder, navigate to it and find the following subfolder:

```
...\Steam\userdata\[Steam user number]\760\remote\0\screenshots
```

Screenshots from other apps can be found in their respective folder:

```
...\Steam\userdata\[Steam user number]\760\remote\[app folder]
\screenshots
```

What can I do if I'm having issues with the SteamVR app?

The problem could be due to missing or corrupt files in the SteamVR app. Make sure that your installation is intact.

1. From your computer, close the SteamVR app.
2. Open the Steam app, and then go to the Library tab.
3. On the left panel, click the drop-down menu and select **Tools**.
4. Right-click **SteamVR**, and then and select **Properties**.
5. In the Local Files tab, click **Verify integrity of tool files**.

For more information, you may refer to the SteamVR Troubleshooting page.

How do I resolve SteamVR Error 208?

If you encounter the `SteamVR Error 208 (Monitor not Found)` issue, check if the troubleshooting details on What can I do to troubleshoot the headset? on page 33 can resolve the problem.

If you're using Windows 8 or later, the issue might be caused by enhancements in power management settings. Do these steps as a workaround:

1. On your computer, go to **Control Panel** > **System and Security** > **System**.
2. Click **Device Manager**, and then click to expand the list under **Universal Serial Bus controllers**.
3. Right-click **Generic USB Hub** (there may be more than one with the same label), and then select **Properties**.
4. Click the **Power Management** tab, and then de-select **Allow the computer to turn off this device to save power**.

5. Turn off and then turn on the link box.
6. Restart the SteamVR app.

   For more information, you may refer to the SteamVR Troubleshooting page.

How can I opt-in to SteamVR Beta?

1. From your computer, open the Steam app.
2. On the left panel, click the drop-down menu and select **Tools**.
3. Right-click **SteamVR**, and then and select **Properties**.
4. Go to the Betas tab.
5. In the Select the beta you would like to opt into drop-down list, select **beta - SteamVR Beta Update**.

If you want to opt out in the future, select **NONE – Opt out of all beta programs**.

6. Close the window, and then wait for SteamVR to finish updating.

Trademarks and copyrights

©2020 HTC Corporation. All Rights Reserved.

VIVE, the VIVE logo, VIVEPORT, the VIVEPORT logo, HTC, the HTC logo, and all other HTC product and service names are trademarks and/or registered trademarks of HTC Corporation and its affiliates in the U.S. and other countries.

Steam, the Steam logo and SteamVR are trademarks and/or registered trademarks of Valve Corporation in the U.S. and/or other countries.

All other trademarks and service marks mentioned herein, including company names, product names, service names and logos, are the property of their respective owners and their use herein does not indicate an affiliation with, association with, or endorsement of or by HTC Corporation. Not all marks listed necessarily appear in this User Guide.

Screen images contained herein are simulated. HTC shall not be liable for technical or editorial errors or omissions contained herein, nor for incidental or consequential damages resulting from furnishing this material. The information is provided “as is” without warranty of any kind and is subject to change without notice. HTC also reserves the right to revise the content of this document at any time without prior notice.

No part of this document may be reproduced or transmitted in any form or by any means, electronic or mechanical, including photocopying, recording or storing in a retrieval system, or translated into any language in any form without prior written permission of HTC.

Index

A

Audio mode *59*

B

Base stations
- about *38*
- installing *39*
- mounting with the kit *42*
- setup tips *41*

C

Chaperone *61*
Controllers
- about *47*
- attaching lanyards *49*
- charging *48*
- pairing with the headset *48*
- turning on or off *48*

F

Firmware updates *66*

H

Headset
- about *7*
- adjusting the IPD *12*
- adjusting the lens distance *14*
- connecting a USB device *16*
- product care *27*
- putting on *9*
- replacing the face cushion *15*

L

Link box
- about *24*
- connecting the headset *25*

P

Phone notifications
- checking *64*
- choosing *63*
- editing replies *64*
- receiving *64*

Play area
- about *53*
- choosing *54*
- room-scale *56*
- setting up *53*
- standing/seated experience *55*
- verifying the setup *57*

R

Room-scale
- setting up *56*

S

Settings
- audio *59*
- Chaperone *61*
- front-facing camera *65*
- in-headset display image *62*

Sound Boost *60*
Standing/seated experience
- setting up *55*

System Dashboard *60*

V

Vive phone app
- downloading *63*
- pairing *63*
- unpairing *65*

Vive system
- turning on *57*